BIXOLON®
SAMSUNG mini printers

SAMSUNG

Service Manual
SRP-275

Impact Printer
Rev. 2.00

http://www.samsungminiprinters.com

■ Table of Contents

1. Precaution Segment 6
1-1 Safety Precautions 6
1-2 Servicing Precaution 7
1-3 Precaution for Electrostatically Sensitive Devices(ESDs) 7
1-4 Introduction 8
2. Installation and Operation 9
2-1 Installation 9
2-1-1 AC Adapter Installation 9
2-1-2 Interface cable and Cash Drawer cable Installation 9
2-1-3 Ribbon Cartridge Installation 10
2-1-4 Paper Roll Installation 11
2-1-5 Changing the paper width 12
2-1-6 Wall Mount Installation 13
2-2 Operation 14
2-2-1 Using the operation panel 14
2-2-2 ERROR LED blinking pattern 15
2-2-3 Hexadecimal Dumping 16
2-2-3 The self Test Mode 16
2-3 Setting the Dip Switches 18
2-3-1 DIP Switch setting for Epson(ESC/POS) mode 18
2-3-2 DIP Switch setting for Citizen(iDP 3550) mode 19
2-3-3 DIP Switch setting for Star(SP500) mode 20
2-3-4 Changing the DIP Switch setting 21
2-4 Setting the Memory Switches 22
2-4-1 Memory Switch setting for Epson(ESC/POS) mode 22
2-4-2 Memory Switch setting for Star mode 26
3. Product Specifications 32
3-1 Appearance 32
3-1-1 Printer Dimensions (mm) 32
3-1-2 AC Adapter Dimensions (mm) 32
3-1-3 Feature Locations 33
3-2 General Specifications 34
3-3 Reference information 35
3-3-1 Printer Mechanism Specification 35
3-3-2 Printing Specification 35
3-3-3 Character Specification 37
3-3-4 Paper Specification 38
3-3-5 Ribbon Cassette Specification 38
3-3-6 Environment Conditions 39
3-3-7 Reliability 40
3-3-8 Certification 40
3-3-9 Printer(SMP715) pin Descriptions 40
3-3-10 Printer Head Specification 41
3-3-11 Printer Head Thermistor Specification 41
3-3-12 PF(Paper Feed) Motor Specification 41
3-3-13 HF(Head Feed) Motor Specification 42
3-3-14 Auto Cutter Specification 42
3-3-15 Switch(Sensor) Specification 42
3-4 SMPS Specifications 42
3-4-1 SMPS (Switching Mode Power Supply) Specification 42
3-4-2 SMPS Output Connector 42
3-5 Interface Specifications 43
3-5-1 RS-232C Serial Interface 43
3-5-2 IEEE1284 Parallel Interface 45
3-5-3 USB Interface 46
3-6 Drawer Kick-Out Specifications 47
3-6-1 Drawer Cable 47
3-6-2 Cable Connection 47

4. Hardware 48
4-1 Wiring Diagram 48
4-1-1 Main board wiring diagram 48
4-1-2 Connector sub PCB wiring diagram 49
4-2 Block Diagram 50
4-3 PCB Layout & Part List 51
4-3-1 Main Board 51
4-4-2 ASSY-PCB-CONNECTOR SUB 57
4-4-3 ASSY-OPERATION PANEL 58
4-4-4 ASSY-PCB-HEAD 59
4-4-5 Serial Interface (RS-232C) 60
4-4-6 Parallel Interface (IEEE1284) 61
4-4-7 USB Interface 62
4-4-8 Ethernet Interface 63
4-5 Schematic Diagram 65
4-5-1 Main Circuit Diagram 65
4-5-2 Head circuit diagram 74
4-5-3 Serial Interface Diagram (RS-232C) 75
4-5-4 Parallel Interface Diagram (IEEE-1284) 76
4-5-5 USB Interface Diagram (Universal Serial Bus) 77
5. Disassembly and Assembly 78
5-1 SMP715 Printer mechanism unit Sub-assembly 78
5-1-1 Frame-main caulking assy 78
5-1-2 Ribbon-feeder assy 78
5-1-3 Lever-ribbon-feeder assy 79
5-1-4 Lever-tension assy 79
5-1-5 Carriage head assy 80
5-1-6 Head-cover assy 80
5-1-7 Frame basket-A assy 81
5-1-8 Frame basket-C assy 82
5-1-9 Frame-holder basket-L assy 83
5-1-10 Frame-holder basket-L caulking assy 83
5-1-11 Frame-holder basket-R caulking assy 83
5-1-12 Frame-housing cutter lower assy 84
5-1-13 Cutter lower assy 84
5-1-14 Frame-rotator assy 85
5-1-15 Holder platen assy 86
5-2 SMP715 Printer mechanism unit Main-assembly 87
5-2-1 Main-assembly A 87
5-2-2 Main-assembly B 88
5-2-3 Main-assembly C 89
5-2-4 Main-assembly D 90
5-2-5 Main-assembly E (for SMP715A type) 91
5-2-6 Main-assembly E (for SMP715C type) 92
5-3 Auto cutter unit assembly 93
5-3-1 AC timing belt assy 93
5-3-2 AC upper frame caulking assy 93
5-3-3 AC upper cutter guide assy 94
5-3-4 AC upper cutter assy 94
5-3-5 AC motor assy 95
5-3-6 AC motor sub assy 95
5-3-7 PCB-AC assy 95
5-3-8 Main assy 96

5-4 SRP-275 Whole unit Sub-assembly 97
5-4-1 Cover base assy 97
5-4-2 Switch-paper near end assy 98
5-4-3 Switch-paper end assy 98
5-4-4 Cover middle assy 99
5-4-5 Switch-cover open assy 100
5-4-6 Switch-paper near end -W assy 100
5-4-7 Bracket PCB assy 101
5-4-8 Serial interface assy 102
5-4-9 cover front-A assy 102
5-5 SRP-275 Whole unit Main-assembly 103
5-5-1 Main-assembly A (for SRP-275A type) 103
5-5-2 Main-assembly A (for SRP-275C type) 105
5-5-3 Main-assembly B 107
5-5-4 Main-assembly C 109
5-5-5 Main-assembly D 110
6. Adjustments and Maintenance 112
6-1 Adjustment 112
6-1-1 Adjustment of Head gap 112
6-1-2 Replacement of Printer-head 112
6-2 Maintenance 113
6-2-1 Cleaning 113
6-2-2 Inspection 113
6-3 Lubricants and adhesive application 114
6-3-1 Lubricant requirements 114
6-3-2 Lubricant types 114
6-3-3 Lubrication points 114
6-3-4 Adhesive application requirements 114
6-3-5 Adhesive types 114
6-3-6 Adhesive application points 114
6-4 Tools, lubricants and adhesives 115
6-4-1 List of tools 115
6-4-2 List of lubricants and adhesives 115
7. Troubleshooting 116
7-1 Troubleshooting flow chart 116
A. POWER LED does not light 117
B. PAPER LED is lit 118
C. ERROR LED is blink 119
D. ERROR LED is lit 120
E. Self test is not normal 121
F. Data from host is not printed normally 122
7-2 Troubleshooting flow tables 123
7-2-1 Initialization problems 124
7-2-2 Printing quality problems 125
7-2-3 Printer mechanism problems 126
7-2-4 Auto cut mechanism problems 127
8. Appendix (Mechanism operating principles) 128
8-1 Transport mechanism 128
8-1-1 Head feeding system 128
8-1-2 Paper feeding system 129
8-1-3 Ribbon feeding system 130
8-1-4 Color changing system 130
8-2 Printing mechanism 131
8-3 Detection mechanism 132
8-3-1 Home position detection mechanism 132
8-3-2 Paper near end detection mechanism 133
8-3-3 Paper end detection mechanism 134
8-3-4 Rear cover open detection mechanism 134
8-3-5 Auto cutter home position detection mechanism 134
8-4 Auto cutter mechanism 135
8-5 Easy paper loading mechanism 136

■ About

About this Manual

This Service Manual describes how to perform hardware service maintenance for the BIXOLON SRP-275 Impact Printer.

Notes

Notes may appear anywhere in the manual. They draw your attention to additional information about the item.

Precaution symbols

⚠ ***NOTICE***

Indicates a Safety Precaution that applies to this part component.

⚠ ***CAUTION***

Use caution when handling these parts.

Copyright

ⓒ 2005 by BIXOLON Co., Ltd. All right reserved.
This Manual may not, in whole or in part, be copied, photocopied, reproduced, translated or converted to any electronic or machine readable from without prior written permission or BIXOLON Co., Ltd.

■ Overview of this Receipt Printer

This System Impact Printer is a microprocessor-based system, using a 32 bit-microprocessor.
This Service Manual provides the technical information for many individual component systems, circuits and gives an analysis of the operations performed by the circuits. If you need more technical information, please contact our service branch or R&D center. Schematics and specifications provide the needed information for the accurate troubleshooting.
All information in this manual is subject to change without prior notice. Therefore, you must check the correspondence of your manual with your machine. No part of this manual may be copied or reproduced in any form or by any means, without the prior written consent of BIXOLON Co., Ltd.

1. Precaution Segment

Follow these safety, servicing and ESD precautions to prevent damage and to protect against potential hazards such as electrical shock.

1-1 Safety Precautions

1. Be sure that all built-in protective devices are in place. Restore any missing protective shields.

2. When re-installing chassis and assemblies, be sure to restore all protective devices, including control knobs and compartment covers.

3. Make sure that there are no cabinet openings through which people- particularly children might insert fingers or objects and contact dangerous voltages. Such openings include excessively wide cabinet ventilation slots and improperly fitted covers and drawers.

4. Leakage Current Hot Check :
   WARNING : Do not use an isolation transformer during this test.
   Use a leakage-current tester or metering system that complies with American National Standards Institute (*ANSI C101.1, Leakage Current for Appliances*), and Underwriters Laboratories (UL Publication UL1410, 59.7).
   With the unit completely reassembled. plug the AC line cord directly into 110V AC or 240V outlet of the Adapter. With the unit's AC switch first in the ON position and then OFF. Measure the current between a known earth ground (metal water pipe, conduit, etc.) and all exposed metal parts,
   including : metal cabinet, frame, screwheads and printer. The current measured should not exceed 0.1 milliamp. Reverse the power-plug prongs in the AC outlet and repeat the test.

5. Design Alteration Warning :
   Never alter or add to the mechanical or electrical design of the Receipt Printer. Unauthorized alterations might create a safety hazard. Also, any design changes or additions will void the manufacturer's warranty.

6. Components, parts and wiring that appear to have overheated or that are otherwise damaged should be replaced with parts that meet the original specifications. Always determine the cause of damage or overheating, and correct any potential hazards.

7. Observe the original lead dress, especially near the following areas : sharp edges, and especially the AC and high voltage supplies. Always inspect for pinched, out-of-place, or frayed wiring. Do not change the spacing between components and the printed circuit board. Check the AC power cord for damage. Make sure that leads and components do not touch thermally hot parts.

8. Product Safety Notice :
   Some electrical and mechanical parts have special safety-related characteristics which might not be obvious from visual inspection. These safety features and the protection they provide could be lost if a replacement component differs from the original. This holds true, even though the replacement may be rated for higher voltage, wattage, etc.

   Components that are critical for safety are indicated in the circuit diagram by shading, (or). Use only replacement components that have the same ratings, especially for flame resistance and dielectric specifications. A replacement part that does not have the same safety characteristics as the original might create shock, fire or other safety hazards.

1-2 Servicing Precaution

WARNING 1 : First read the “Safety Precautions” section of this manual. If some unforeseen circumstance creates a conflict between the servicing and safety precautions, always follow the safety precautions.

WARNING 2 : An electrolytic capacitor installed with the wrong polarity might explode.

1. Always unplug the unit’s AC power cord from the AC power source or the Power Switch off before attempting to :
   (a) Remove or reinstall any component or assembly,
   (b) Disconnect an electrical plug or connector,
   (c) Connect a test component in parallel with an electrolytic capacitor.
2. Some components are raised above the printed circuit board for safety. An insulation tube or tape is sometimes used. The internal wiring is sometimes clamped to prevent contact with thermally hot components. Reinstall all such elements to their original position.
3. After servicing, always check that the screws, components and wiring have been correctly reinstalled. Make sure that the portion around the serviced part has not been damaged.
4. Check the insulation between the blades of the AC plug and accessible conductive parts(examples : metal panels and input terminals).
5. Insulation Checking Procedure : Disconnect the power cord from the AC source and turn the power switch ON. Connect an insulation resistance meter (500V) to the blades of the AC plug. The insulation resistance between each blade of the AC plug and accessible conductive parts (see above) should be greater then 1 mega-ohm.
6. Never defeat any of the B+ voltage interlocks. Do not apply AC power to the unit(or any of its assemblies) unless all solid-state heat sinks are correctly installed.
7. Always connect an instrument’s ground lead to the instrument chassis ground before connecting the positive lead; always remove the instruments ground lead last.

1-3 Precaution for Electrostatically Sensitive Devices(ESDs)

1. Some semiconductor(“solid state”) devices are easily damaged by static electricity. Such components are called Electrostatically Sensitive Devices (ESDs); examples include integrated circuits and some field-effect transistors. The following techniques will reduce the occurrence of component damage caused by static electricity.
2. Immediately before handling any semiconductor components or assemblies. drain the electrostatic charge from your body by touching a known earth ground. Alternatively, wear a discharging wriststrap device. (Be sure to remove it prior to applying power-this is an electric shock precaution.)
3. After removing an ESD-equipped assembly. Place it on a conductive surface such as aluminum foil to prevent accumulation of electrostatic charge.
4. Do not use freon-propelled chemicals. These can generate electrical charges that damage ESDs.
5. Use only a grounded-tip soldering iron when soldering or unsoldering ESDs.
6. Use only an anti-static solder removal device. Many solder removal devices are not rated as “anti-static;” these can accumulate sufficient electrical charge to damage ESDs.
7. Do not remove a replacement ESD from its protective package until you are ready to install it. Most replacement ESDs are packaged with leads that are electrically shorted together by conductive foam, aluminum foil or other conductive materials.
8. Immediately before removing the protective material from the leads of a replacement ESD, touch the protective material to the chassis or circuit assembly into which the device will be installed.
9. Minimize body motions when handling unpackaged replacement ESDs. Motions such as brushing clothes together, or lifting a foot from a carpeted floor can generate enough static electricity to damage an ESD.

1-4 Introduction

The SRP-275 is a high-quality impact dot matrix POS printer.
This one-station printer has the following features.

- Compact design and light-weight.
- High-speed printing using logic-seeking.
- Easy to use : Easy paper loading.
- High reliability and long life due to the use of stepping motors for head carriage return and paper feeding.
- Two color printing (red/black) available.
- Various formats are possible because the paper feeding pitch is selectable.
- High general control utility based on the ESC/POS(TM) standard.
- The head can be driven due to the internal drawer interface.
- Character font (7 × 9, 9 × 9) is selectable.
- The auto cutter uses a circular method with a high-quality blade and a long life (Approximately 1,000,000 cuts).
- Paper near end Switch is standard.
- A internal AC adaptor.
- Please be sure to read the instructions in this manual carefully before using your new printer.

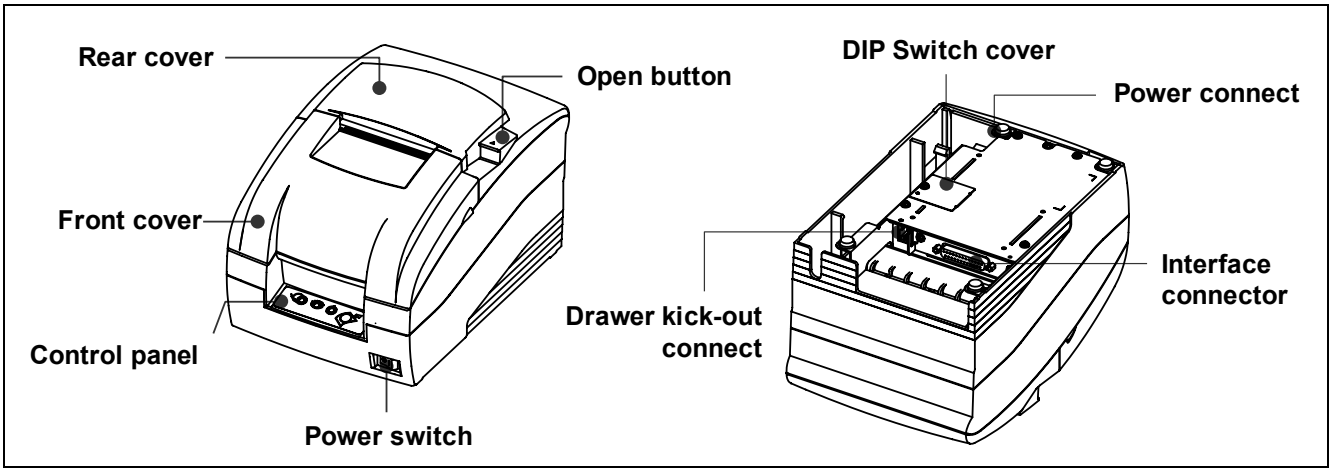

[Front view] [Rear view]

2. Installation and Operation

2-1 Installation

2-1-1 AC Adapter Installation

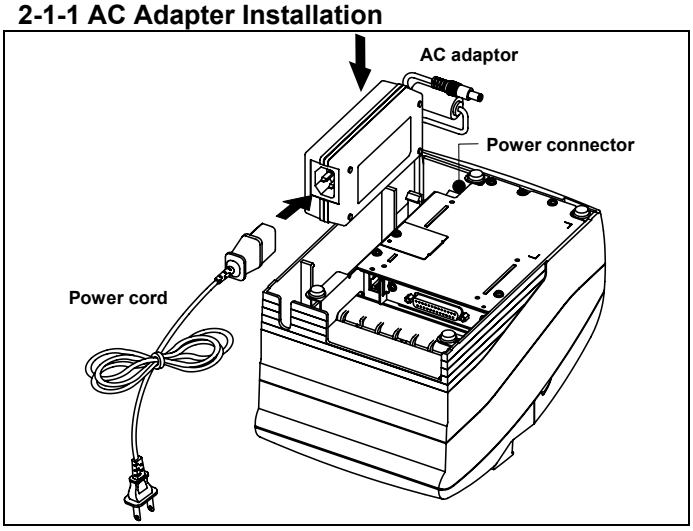

1) Make sure the printer is turned off.
2) Before inserting the AC adaptor, connect the power cord.
3) Insert the AC adaptor as shown.
4) Plug the AC adapter cable into the printer's power connector.
5) Plug the power cord into the outlet, and turn on the power.

CAUTION

Before connecting the printer to the power supply, make sure that the voltage and power specifications match the printer's requirements. Using an incorrect power supply can cause serious damage to the printer.

2-1-2 Interface cable and Cash Drawer cable Installation

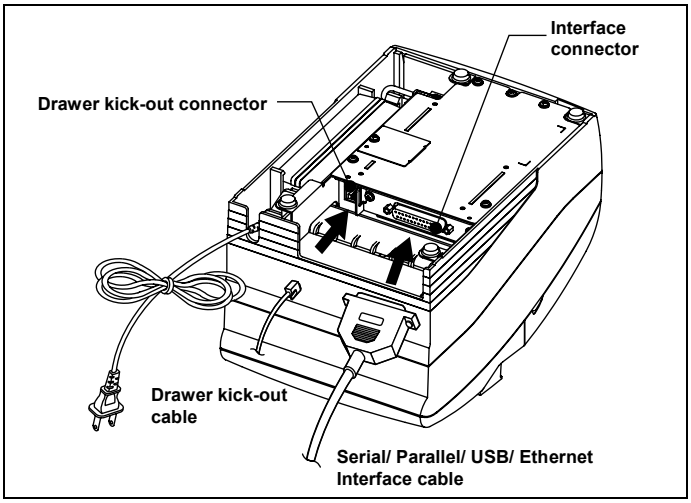

1) Turn off printer and the host ECR (host computer).
2) Plug the interface cable into the interface connector on the printer then fasten the screw on both sides of the connector.
3) Plug the drawer kick-out cable into the drawer kick-out connector on the printer.
(When removing the drawer kick-out cable, press on the connector's clip while pulling out.)

NOTES

Connect the printer to the host ECR (host computer) though an interface cable matching the specification of the printer and the host ECR (host computer). Be sure to use a drawer that matches the printer's specification.
Depending on the interface your system uses, either connect the serial, parallel, USB or Ethernet communication cable to the appropriate connector on the back of the printer. Cables are provided by your dealer or system installer.

2-1-3 Ribbon Cartridge Installation

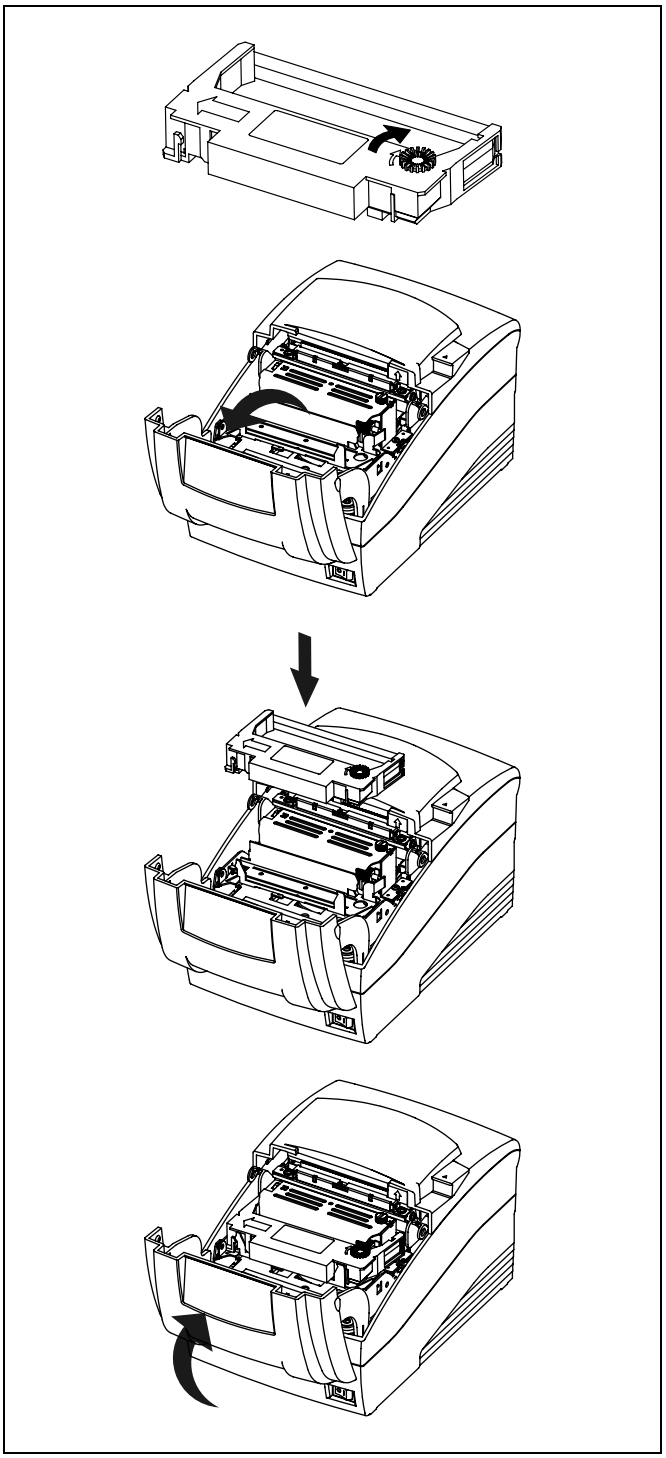

1) Before inserting the ribbon cassette, turn the knob clockwise to prevent twisting the ribbon.

2) Open the front cover of printer.

3) Take out the old ribbon cassette if there is one.

4) Insert the new ribbon cassette as shown and pay particular attention to the placement of the ribbon in front of the Printer Head.

5) During inserting the ribbon cassette, turn the knob clockwise again to make sure the ribbon moves freely in the cassette.

6) Close front cover of printer.

NOTES

Malfunctions and other problems may arise if other than specified ribbon cassettes are used in the printer. The Warranty may be void if other than specified ribbon cassettes are used. Contact your dealer or place of purchase for more information about proper ribbon cassettes.

2-1-4 Paper Roll Installation

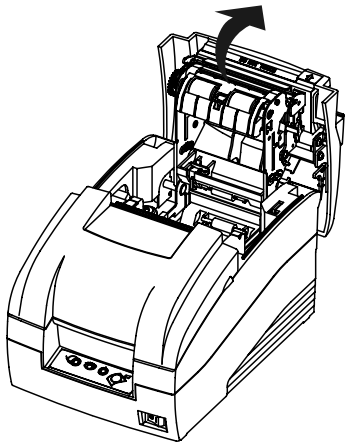

1) To prevent data loss, make sure that the printer is not receiving data.

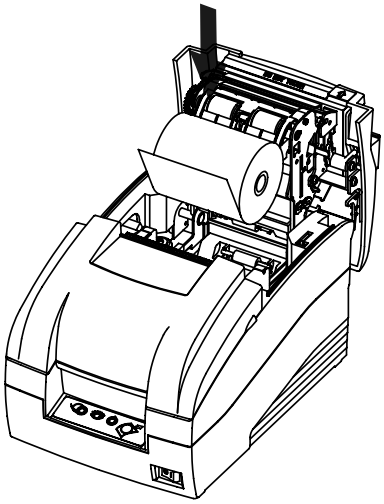

2) Open the rear cover by pushing the open button and push the arrow mark back.

3) Remove the used paper roll core if there is one.

4) Insert the paper roll as shown.

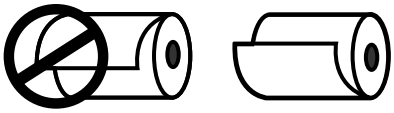

5) Be sure to note the correct direction that the paper should come off the paper roll.

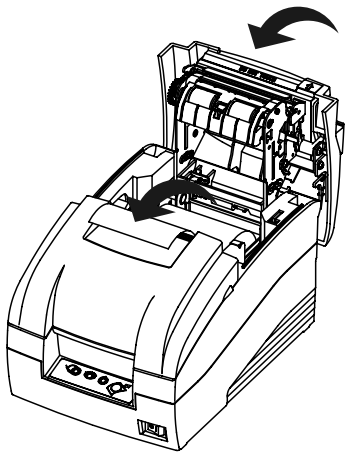

6) Pull out small amount of paper as shown. Then close the cover and tear off the extra paper by pulling it toward the front of the printer.

⚠ CAUTION

Do not touch the auto cutter blade when you open rear cover.

2-1-5 Changing the paper width

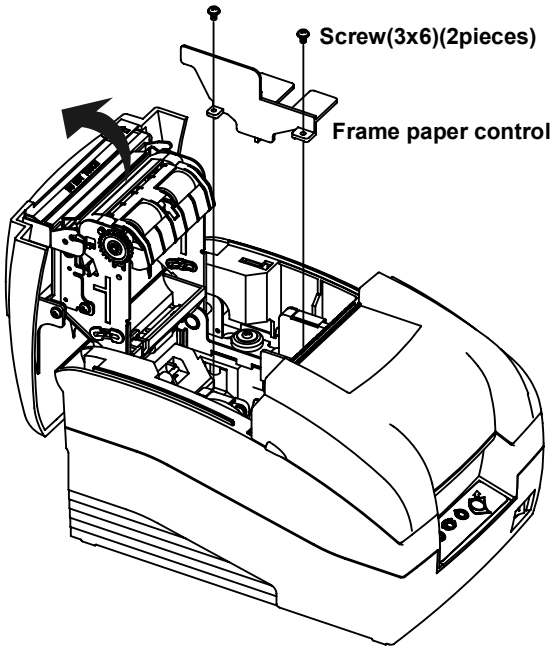

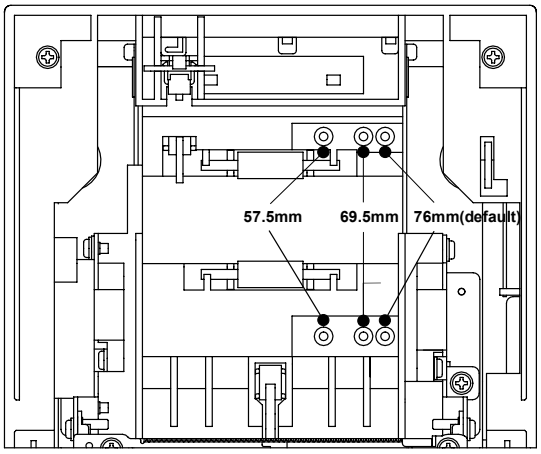

1) Open the rear cover.

2) Remove the Frame paper control by loosing the two screws(3×6).

3) Reattach the Frame paper control in your wanting position. (Insert and tighten two screws(3×6) to reattach.)

4) Close the rear cover.

5) Change the Memory Switch setting for changing paper roll width. (See the instructions "Setting the Memory Switches" in 2-2.Operation)

2-1-6 Wall Mount Installation

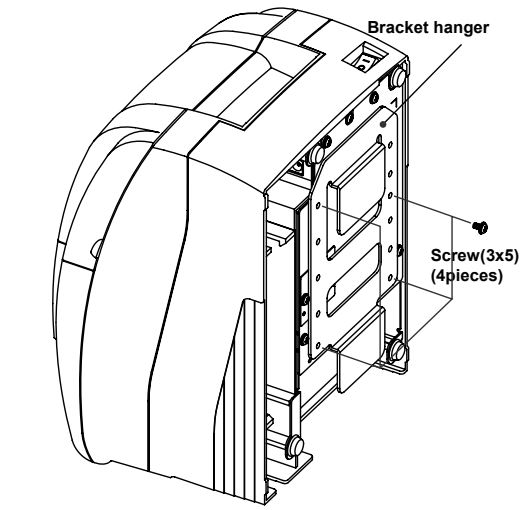

1) Turn the Set over and attach the Bracket hanger to the Frame base then tighten four screws.

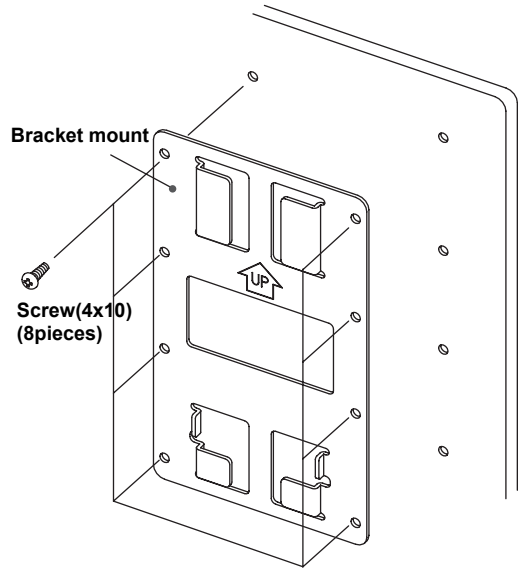

2) Attach the Bracket mount to the wall firmly with the eight screws. Be sure that the Bracket attached properly to match the direction of arrow as shown. And the Bracket mount should be always fixed vertically.

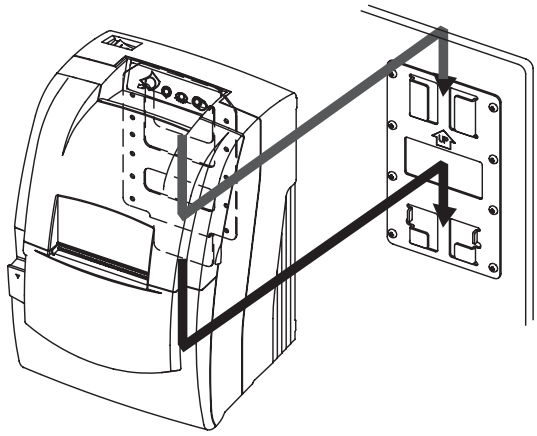

3) Insert the Bracket hanger of Set to the Bracket mount as shown.

2-2 Operation

2-2-1 Using the operation panel

Most of the functions of this printer are governed by software, but you can monitor the printer s status by looking at the lights on the control panel and for some procedures you will use the buttons.

• Control panel

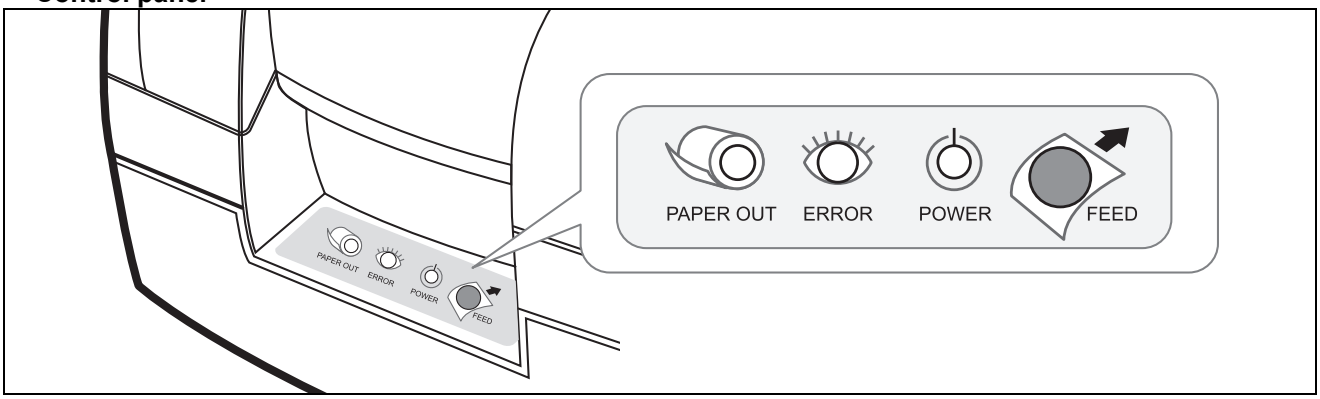

- POWER LED (Green Color)

This indicator light is on when the power is turned on. It blinks when the printer is in the self test printing standby state. Always wait until this indicator light stops blinking before you start using the printer and before you turn it off.

- ERROR LED (Red Color)

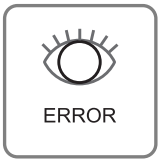

When this indicator light is on (but not blinking), it means that the printer is out of paper or almost out of paper or the printer covers are open. When this light blinking, there is an error. (See "ERROR LED blinking pattern" (2.2.2) in Chapter 2.) If you see this light blinking, turn off the printer for a few seconds and then turn it back on. If the light is still blinking, call your supervisor or a service person.

- PAPER OUT LED (Red Color)

When this indicator light is on, it means that the paper near end. Replace the new paper roll. When ERROR and PAPER OUT indicator lights are on it means paper end. Install the paper roll.(See "Installing paper roll"(2.1.4)in Chapter 2.)

- FEED button

Use this button to feed paper or to start self test and for hexadecimal dump mode.
(See the instructions "Self test" (2.2.3) in this chapter for self test.)
(See the instructions "Hexadecimal dump" (2.2.4) in Chapter 2 for hexadecimal dump mode.)

2-2-2 ERROR LED blinking pattern

The printer stops all printer operations for the selected paper section, goes off line, and the ERROR LED blinks when an error is detected.

• Errors that automatically recover

Error	Description	ERROR LED blinking pattern	Recovery
Rear cover open error (When recoverable Error is selected)(*1)	The rear cover is opened when printing	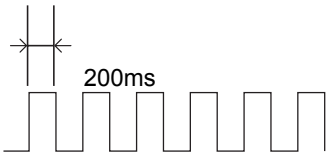	Recovers automatically when the rear cover is closed.
Print head temperature error(*2)	The temperature of the print head is extremely high.		Recovers automatically when the print head cools.

NOTES

(*1) These conditions are selected by MSW8-5, 8-8. When MSW8-5 (mapping of the cover open status) is off, the error hasn't occurred but there is a "paper end error" instead. If MSW8-8 is off, this error is handled as an automatically recoverable error.

(*2) Print head temperature error is not abnormal.

• Recoverable errors

When a recoverable error occurs, after the cause of the error is removed, the printer can recover from the error by receiving an error recovery command without turning off the power.

Error	Description	ERROR LED blinking pattern	Recovery
Rear cover open error (*1)	The rear cover is opened when printing.	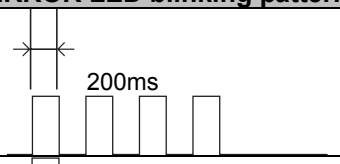	Recovers automatically when the rear cover is closed.
Auto cutter error (Type C only)	The auto cutter does not work correctly.		Recovers by error recovery command.
Home position detection error (This is "Mechanical error")	The home position cannot be detected due to a paper jam.		Recovers by error recovery command.

NOTES

(*1) These conditions are selected by MSW8-5, 8-8. When MSW8-5 (mapping of the cover open status) is off, the error does not occur and a "paper end error" occurs instead. If MSW8-8 is on, this error is handled as a recoverable error.

• Errors that are impossible to recover

Error	Description	ERROR LED blinking pattern	Recovery
R/W error in memory or gate array	After R/W checking, the printer does not work correctly. Writing to, reading out, or erasing the NV memory for image scanning results does not work correctly.	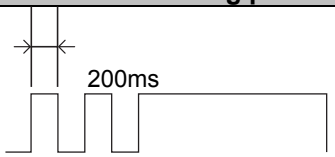	Recovers automatically when the rear cover is closed.
High voltage error	The power supply voltage is extremely high.		Impossible to recover.
Low voltage error	The power supply voltage is extremely low.		Impossible to recover.
CPU execution error	The CPU executes an incorrect address or I/F board is not connected.		Impossible to recover.
Print head temperature detection circuit error.	There is an abnormality is the print head temperature.		Impossible to recover.

NOTES

If you see this light blinking, turn off the printer for a few seconds and then turn it back on.
If the light is still blinking, call your supervisor or a service person.

2-2-3 Hexadecimal Dumping

This feature allows experienced users to see exactly what data is coming to the printer.
This can be useful in finding software problems. When you turn on the hexadecimal dump function, the printer prints all commands and other data in hexadecimal format along with a guide section to help you find specific commands.

• To use the hexadecimal dump feature, follow these steps:

1) After you make sure that the printer is off, open the rear cover of the printer.

2) Hold down the FEED button while you turn on the printer.

3) Close the rear cover.

4) Run any software program that sends data to the printer. The printer prints "Hexadecimal dump" and then all the codes are received in a two column format. The first column contains the hexadecimal codes and the second column gives the ASCII characters that correspond to the codes.

```
Hexadecimal Dump
To terminate hexadecimal dump
Press FEED button three times


1B 21 00 1B 26 02 40 40 . ! . . & . @ @
1B 25 01 1B 63 34 00 1B . % . . c 4 . .
41 42 43 44 45 46 47 48 A B C D E F G H


<Online Hex Dump Completed>
```

(A period(.) is printed for each code that has no ASCII equivalent.)

5) When the printing finishes, turn off the printer.

2-2-3 The self Test Mode

The self test let you know if your printer is operating properly. It checks the printing quality, ROM version, DIP Switch settings, memory switch settings and statistic data.
The test is independent of any other equipment or software, so it is a good idea to run it when you first set up the printer or if you have any trouble. If the self test works correctly, the problem is in the other equipment or the software, not the printer.

• Running the self test

1) Make sure the printer is turned off and the printer cover is closed properly.

2) While holding down the FEED button, turn on the printer and continue to hold until the paper begins to feed. The self test prints the printer DIP Switch settings and memory switch settings. And cuts the paper and pauses. (The power light blinks.)

3) Press the FEED button to continue printing the rolling ASCII pattern.

4) The self test mode terminates after printing the rolling ASCII pattern automatically.

• Example of Self test sheet

SELF TEST

<SRP-275 VER. 1.0>

DIP Switch setup status

Interpreter (DIP1_1,2): Epson
AutoCut (DIP1 _ 3): Enabled
BusyCondition(DIP1 _ 4): Off.L/BF
Memory S/W (DIP1 _ 5): Off
Logo Print (DIP1 _ 6): Off
Near_end (DIP1 _ 7): Enabled
Print Column (DIP1 _ 8): 40 / 33
AutoLineFeed (DIP2 _ 1): Disabled
Interface (Parallel): IEEE1284

Paper roll width : 76mm

DIP S/W 1

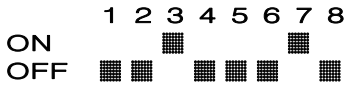

DIP S/W 2

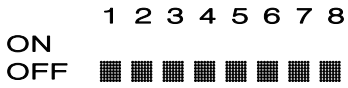

Memory Switch setup status

Memory S/W 1 (M1_1-3): Reserved
Code Page (M1_4-8): PC437
Memory S/W 2 (M2_1-4): Reserved
Cover Open (M2 _ 5): Paper Out
Memory S/W 2 (M2 _ 6): Reserved
Busy Release (M2 _ 7): 640 bytes
ErrorRecovery(M2 _ 8): Automatic

Memory S/W 1

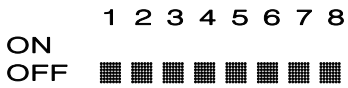

Memory S/W 2

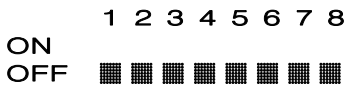

<Press Feed Button ... >

!"#$%&'()*+,-./0123456789:;<=>?@ABCDEFGH
"#$%&'()*+,-./0123456789:;<=>?@ABCDEFGHI
#$%&'()*+,-./0123456789:;<=>?@ABCDEFGHIJ
$%&'()*+,-./0123456789:;<=>?@ABCDEFGHIJK
%&'()*+,-./0123456789:;<=>?@ABCDEFGHIJKL
&'()*+,-./0123456789:;<=>?@ABCDEFGHIJKLM
'()*+,-./0123456789:;<=>?@ABCDEFGHIJKLMN
()*+,-./0123456789:;<=>?@ABCDEFGHIJKLMNO
)*+,-./0123456789:;<=>?@ABCDEFGHIJKLMNOP
*+,-./0123456789:;<=>?@ABCDEFGHIJKLMNOPQ
+,-./0123456789:;<=>?@ABCDEFGHIJKLMNOPQR
,-./0123456789:;<=>?@ABCDEFGHIJKLMNOPQRS
-./0123456789:;<=>?@ABCDEFGHIJKLMNOPQRST
./0123456789:;<=>?@ABCDEFGHIJKLMNOPQRSTU
/0123456789:;<=>?@ABCDEFGHIJKLMNOPQRSTUV
0123456789:;<=>?@ABCDEFGHIJKLMNOPQRSTUVW
123456789:;<=>?@ABCDEFGHIJKLMNOPQRSTUVWX
23456789:;<=>?@ABCDEFGHIJKLMNOPQRSTUVWXY
3456789:;<=>?@ABCDEFGHIJKLMNOPQRSTUVWXYZ
456789:;<=>?@ABCDEFGHIJKLMNOPQRSTUVWXYZ[
56789:;<=>?@ABCDEFGHIJKLMNOPQRSTUVWXYZ[\
6789:;<=>?@ABCDEFGHIJKLMNOPQRSTUVWXYZ[\]
789:;<=>?@ABCDEFGHIJKLMNOPQRSTUVWXYZ[\]^
89:;<=>?@ABCDEFGHIJKLMNOPQRSTUVWXYZ[\]^_
9:;<=>?@ABCDEFGHIJKLMNOPQRSTUVWXYZ[\]^_`
:;<=>?@ABCDEFGHIJKLMNOPQRSTUVWXYZ[\]^_`a
;<=>?@ABCDEFGHIJKLMNOPQRSTUVWXYZ[\]^_`ab
<=>?@ABCDEFGHIJKLMNOPQRSTUVWXYZ[\]^_`abc
=>?@ABCDEFGHIJKLMNOPQRSTUVWXYZ[\]^_`abcd
>?@ABCDEFGHIJKLMNOPQRSTUVWXYZ[\]^_`abcde
?@ABCDEFGHIJKLMNOPQRSTUVWXYZ[\]^_`abcdef
@ABCDEFGHIJKLMNOPQRSTUVWXYZ[\]^_`abcdefg
ABCDEFGHIJKLMNOPQRSTUVWXYZ[\]^_`abcdefgh
BCDEFGHIJKLMNOPQRSTUVWXYZ[\]^_`abcdefghi
CDEFGHIJKLMNOPQRSTUVWXYZ[\]^_`abcdefghij
DEFGHIJKLMNOPQRSTUVWXYZ[\]^_`abcdefghijk
EFGHIJKLMNOPQRSTUVWXYZ[\]^_`abcdefghijkl
FGHIJKLMNOPQRSTUVWXYZ[\]^_`abcdefghijklm
GHIJKLMNOPQRSTUVWXYZ[\]^_`abcdefghijklmn
HIJKLMNOPQRSTUVWXYZ[\]^_`abcdefghijklmno
IJKLMNOPQRSTUVWXYZ[\]^_`abcdefghijklmnop
JKLMNOPQRSTUVWXYZ[\]^_`abcdefghijklmnopq
KLMNOPQRSTUVWXYZ[\]^_`abcdefghijklmnopqr
LMNOPQRSTUVWXYZ[\]^_`abcdefghijklmnopqrs
MNOPQRSTUVWXYZ[\]^_`abcdefghijklmnopqrst
NOPQRSTUVWXYZ[\]^_`abcdefghijklmnopqrstu
OPQRSTUVWXYZ[\]^_`abcdefghijklmnopqrstuv
PQRSTUVWXYZ[\]^_`abcdefghijklmnopqrstuvw

*** Completed ***

2-3 Setting the Dip Switches

Although the factory settings are best for almost all users, if you have special requirements, you can change the DIP Switch. Your printer has two sets of DIP Switches. The functions of the switches are shown in the following table.

2-3-1 DIP Switch setting for Epson(ESC/POS) mode

• DIP Switch 1

Switch	Function	ON	OFF	Default
1-1	Emulation Selection (*1)	Refer to the following table		OFF
1-2				
1-3	Auto cutter	Enable	Disable	OFF
1-4	BUSY condition	Receive buffer full	Receive buffer full or Offline	OFF
1-5	Serial interface selection	Memory Switch	DIP Switch	OFF
1-6	Print NV bit image #1 after cutting	Enable	Disable	OFF
1-7	Near end switch	Enable	Disable	OFF
1-8	Print column	42/35	40/33	OFF

• DIP Switch 2 (RS232C serial interface model)

Switch	Function	ON	OFF	Default
2-1	Data receive error	Ignore	Print “?”	OFF
2-2	Reserved			OFF
2-3	Hand shaking	XON/XOFF	DTR/DSR	OFF
2-4	Word length	7 bits	8 bits	OFF
2-5	Parity check	Enable	Disable	OFF
2-6	Parity selection	EVEN	ODD	OFF
2-7	Baud rate selection (*2)	Refer to the following table		OFF
2-8				OFF

• DIP Switch 2 (Parallel interface model)

Switch	Function	ON	OFF	Default
2-1	Auto Line Feed	Enable	Disable	OFF
2-2~8	Undefined			OFF

NOTES

(*1) Emulation Selection (DSW 1-1 and 1-2)

Emulation	1-1	1-2
EPSON	OFF	OFF
STAR	OFF	ON
CITIZEN	ON	OFF
EPSON-KP	ON	ON

- EPSON-KP(EPSON Kitchen Printer mode) : A alarm is generated by printer after auto cutting and in paper end error.

(*2) Baud rate selection (Transmission speed)

Transmission	2-7	2-8
2400 baud	ON	ON
4800 baud	OFF	ON
9600 baud	OFF	OFF
19200 baud	ON	OFF

2-3-2 DIP Switch setting for Citizen(iDP 3550) mode

• DIP Switch 1

Switch	Function	ON	OFF	Default
1-1	Emulation Selection (*1)	Refer to the following table		OFF
1-2				
1-3	Auto cutter	Enable	Disable	OFF
1-4	CBM command	CBM2 mode (iDP3530 system)	CBM1 mode (iDP3540 system)	OFF
1-5	International characters (*2)	Refer to the following table		ON
1-6				
1-7				
1-8	CR mode	CR	CR+LF	OFF

• DIP Switch 2 (RS232C serial interface model)

Switch	Function	ON	OFF	Default
2-1	Word length	8 bits	7 bits	ON
2-2	Parity check	Disable	Enable	ON
2-3	Parity selection	ODD	EVEN	ON
2-4	Hand shaking	DTR/DSR	XON/XOFF	ON
2-5	Baud rate selection (*3)	Refer to the following table		OFF
2-6				
2-7	Near end switch	Enable	Disable	OFF
2-8	Mechanism type	Graphic	Character	OFF

NOTES

(*1) Emulation Selection (DSW 1-1 and 1-2)

Emulation	1-1	1-2
EPSON	OFF	OFF
STAR	OFF	ON
CITIZEN	ON	OFF
EPSON-KP	ON	ON

- EPSON-KP(EPSON Kitchen Printer mode) : A alarm is generated by printer after auto cutting and in paper end error.

(*2) International Character Selection

No. / Country	DSW 1-5	DSW 1-6	DSW 1-7	Code page
U.S.A.	ON	ON	ON	Page 0 (PC437 : U.S.A.)
France	OFF	ON	ON	Page 2 (PC850 : Multilingual)
Germany	ON	OFF	ON	
U.K.	OFF	OFF	ON	
Denmark	ON	ON	OFF	Page 5 (PC865 : Nordic)
Sweden	OFF	ON	OFF	
Italy	ON	OFF	OFF	Page 2 (PC850 : Multilingual)
Windows Code	OFF	OFF	OFF	Windows Code

(*3) Baud rate selection (Transmission speed)

Transmission	2-5	2-6
2400 baud	ON	ON
4800 baud	OFF	ON
9600 baud	OFF	OFF
19200 baud	ON	OFF

2-3-3 DIP Switch setting for Star(SP500) mode

• DIP Switch 1

Switch	Function	ON	OFF	Default
1-1	Emulation Selection (*1)	Refer to the following table		OFF
1-2				
1-3	Auto cutter	Enable	Disable	OFF
1-4	Black/Red Printing	Enable	Disable	OFF
1-5	Reserved			OFF
1-6				
1-7				
1-8				

• DIP Switch 2 (RS232C serial interface model)

Switch	Function	ON	OFF	Default
2-1	Reserved			OFF
2-2				
2-3	Hand shaking	XON/XOFF	DTR/DSR	OFF
2-4	Word length	7 bits	8 bits	OFF
2-5	Parity check	Enable	Disable	OFF
2-6	Parity selection	EVEN	ODD	OFF
2-7	Baud rate selection (*2)	Refer to the following table		OFF
2-8				OFF

NOTES

(*1) Emulation Selection (DSW 1-1 and 1-2)

Emulation	1-1	1-2
EPSON	OFF	OFF
STAR	OFF	ON
CITIZEN	ON	OFF
EPSON-KP	ON	ON

- EPSON-KP(EPSON Kitchen Printer mode) : A alarm is generated by printer after auto cutting and in paper end error.

(*2) Baud rate selection (Transmission speed)

Transmission	2-7	2-8
2400 baud	ON	ON
4800 baud	OFF	ON
9600 baud	OFF	OFF
19200 baud	ON	OFF

NOTICE

Change in DIP Switch settings are recognized only when the printer power is turned on or when the printer is reset by using the interface. If the DIP Switch setting is changed after the printer power is turned on, the change does not take effect until the printer is turned on again or is reset.

2-3-4 Changing the DIP Switch setting

If you need to change settings, follow the steps below to make your changes.

⚠ *CAUTION*

Turn off the printer before removing the DIP Switch cover to prevent an electric short, which can damage the printer.

1) Make sure the printer is turned off.

2) Remove the screw from the DIP Switch cover.

   Then take off the DIP Switch cover, which is shown in the illustration below.

3) Set the switches using a pointed tool, such as tweezers or a small.

4) Replace the DIP Switch cover. Then secure it with the screw.

✎ *NOTES*

The new settings take effect when you turn on the printer.

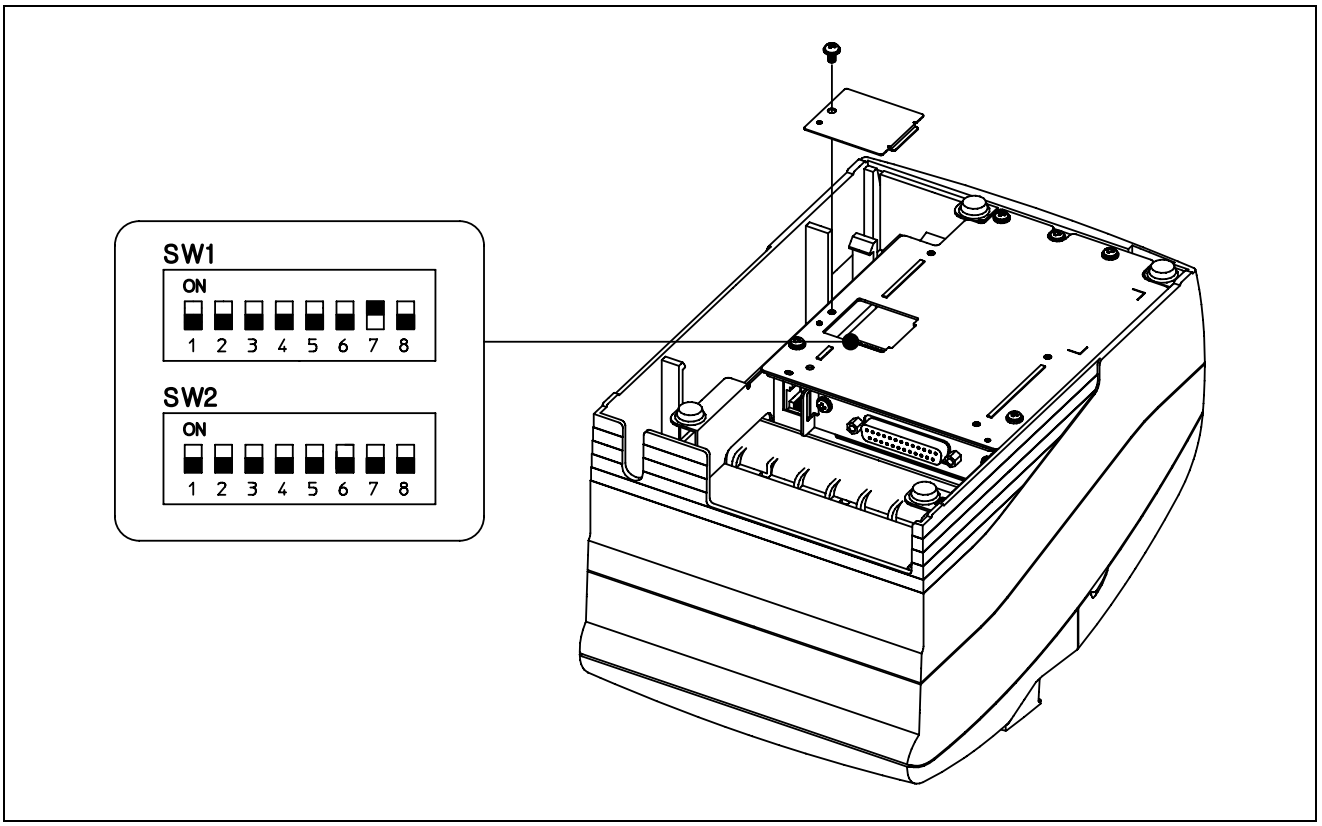

2-4 Setting the Memory Switches

2-4-1 Memory Switch setting for Epson(ESC/POS) mode

This printer has “Memory Switch” set which is software switches. Memory Switch set has “MSW 2”, “MSW 8”, “Customize value”, “Serial communication condition”. “Memory Switch setting utility” can change the Memory Switch set to ON or OFF as shown in the table below (default: all OFF):

NOTES

The Memory Switch is available to be changed by three methods:
- Memory Switch setting utility
- Memory Switch setup mode (there are limitations on what can be changed)
- Control from ESC/POS command
- Some Memory Switch settings can be changed by the "Memory Switch setting mode". See "Procedure of Memory Switch setting".

Settings of the Memory Switch are stored in the NV memory; therefore, even if the printer is turned off, the settings are maintained. When you replace a SRP-270 with a SRP-275, you should adjust the MSW 8-5 to OFF.

• Memory Switch 2

Switch	Function	On	Off
1	Reserved	-	Fixed to Off
2	Reserved	-	Fixed to Off
3	Reserved for Chinese selection	-	Fixed to Off
4~8	Code page selection (*1)	Refer to the following table	

NOTES

Desired code page can be selected using Memory Switch 2-4~8 by setting as following.

(*1) Code page selection

MSW 2-8	MSW 2-7	MSW 2-6	MSW 2-5	MSW 2-4	Character Table
0	0	0	0	0	Page 0 (PC437 : U.S.A.)
0	0	0	0	1	Page 1 (Katakana)
0	0	0	1	0	Page 2 (PC850 : Multilingual)
0	0	0	1	1	Page 3 (PC860 : Portuguese)
0	0	1	0	0	Page 4 (PC863 : Canadian-French)
0	0	1	0	1	Page 5 (PC865 : Nordic)
0	0	1	1	0	Page 16 (WPC1252 : Latin1)
0	0	1	1	1	Page 17 (PC866 : Russian)
0	1	0	0	0	Page 18 (PC852 : Latin2)
0	1	0	0	1	Page 19 (PC858 : Euro)
0	1	0	1	0	Page 21 (PC862 : Israel)
0	1	0	1	1	Page 22 (PC864 : Arabic)
0	1	1	0	0	Page 23 (Thai character code 42)
0	1	1	0	1	Page 24 (WPC1253 : Greek)
0	1	1	1	0	Page 25 (WPC1254 : Turkish)
0	1	1	1	1	Page 26 (WPC1257 : Baltic)
1	0	0	0	0	Page 27 (Farsi) (*2)
1	0	0	0	1	Page 28 (WPC1251 : Russian) (*2)
1	0	0	1	0	Page 29 (PC737 : Greek) (*2)
1	0	0	1	1	Page 30 (PC775 : Baltic) (*2)
1	0	1	0	0	Page 31 (Thai character code 14)
1	0	1	0	1	Page 32 (Old Code : Israel)
1	0	1	1	0	Page 33 (WPC1255 : Israel)
1	0	1	1	1	Page 34 (Thai character code 11)
1	1	0	0	0	Page 35 (Thai character code 18)
1	1	0	1	0	Page 37 (PC857 : Turkish)
1	1	0	1	1	Page 38 (PC928 : Greek)

(*2) Only Font B available.

• Memory Switch 8

Switch	Function	On	Off
1	Upside down	On	Off
2	Font Selection	Font B	Font A
3	Selection Paper End Buzzer	Off	On
4	Reserved	Fixed to Off	
5	Selection of the cover open status	Cover open	Paper end
6	Buffer Size	40 bytes	8 Kbytes
7	Receive buffer full release	Remaining 522 bytes	Remaining 640 bytes
8	Printer (Cover open during operation)	Errors that can possibly recover	Errors that automatically recover

NOTES

MSW 8-5:
When Off is selected, a bit of the "paper end sensor" in each status that is transmitted from the printer is changed every time the rear cover is open or closed. When On is selected, a bit of the "rear cover open / close" in each status that is transmitted from the printer is changed every time the rear cover is open or closed. When you replace a SRP-270 with a SRP-275, you should adjust the MSW 8-5 to Off.

MSW 8-8:
When Off is selected, a bit of the "automatic recoverable error" in each status that is transmitted from the printer is changed every time the rear cover is open. When On is selected, a bit of the "mechanical error" in each status that is transmitted from the printer is changed every time the rear cover is open.

The setting of MSW 8-5 and 8-8 can be set by "Memory Switch setup mode".

• Customize value

Function	Selectable value
Paper roll width	57.5 mm / 69.5 mm / 76 mm (default value)

NOTES

These setting can be set by "Memory Switch setup mode."

• Serial communication

Function	Selectable value	
baud rate	2400 bps	4800 bps
	9600 bps	19200 bps
Parity	None	Odd
	Even	-
Handshake	DSR/DTR	XON/XOFF
Data length	7 bit	8 bit

NOTES

There are two methods, DIP Switch and Memory Switch, to adjust the serial communication conditions. DIP Switch 1-5 selects which is effective, DIP Switch or Memory Switch.
To enable the "Serial communication" setting, you have to adjust the "Serial interface selection" function of DIP Switch 1-5 to "Memory Switch".
These settings can be set by "Memory Switch setup mode".

• Memory Switch Setup Mode

The following items are specified in the Memory Switch setup mode:

Basic Serial communication condition (Serial communication)
- Transmission speed
- Parity
- Handshaking
- Data length

Receive buffer full release condition (MSW 8-7)
Paper roll width (Customize value)
Cover open status (MSW 8-5)

NOTES

All new settings will be lost if the power supply is turned off in the Memory Switch setup mode. Be sure to follow the proper procedure, and turn the power off at the correct time.

Use the following procedure to start the Memory Switch setup mode.
1) Open the paper roll cover.
2) Turn the power on while pressing the paper FEED button.
3) Press the FEED button twice while POWER, ERROR, and PAPER OUT LEDs are lit.
4) Close the cover. The printer prints the enabled settings of the Memory Switches and instructions.
5) Follow the instructions to process the switch setup.

NOTES

In the Memory Switch setup, the power LED may be flashing.

• Example of Memory Switch setup sheet

```
Memory S/W Setup

You can choose desired item using
YES or NO as following

YES: Keep pressing FEED button
     Until printing starts
NO : Press & release it swiftly


Serial interface setting

Do you want to change
   Serial interface condition?




Buffer full release condition

Current condition: 640 bytes left

Do you want to change
   Buffer full release condition?
```

```
Paper width

Current paper width: 76.0 mm

Do you want to change
               paper width?




Cover open status

Current status: Paper out

Do you want to change
            cover open status?
```

• Procedure of Memory Switch setting

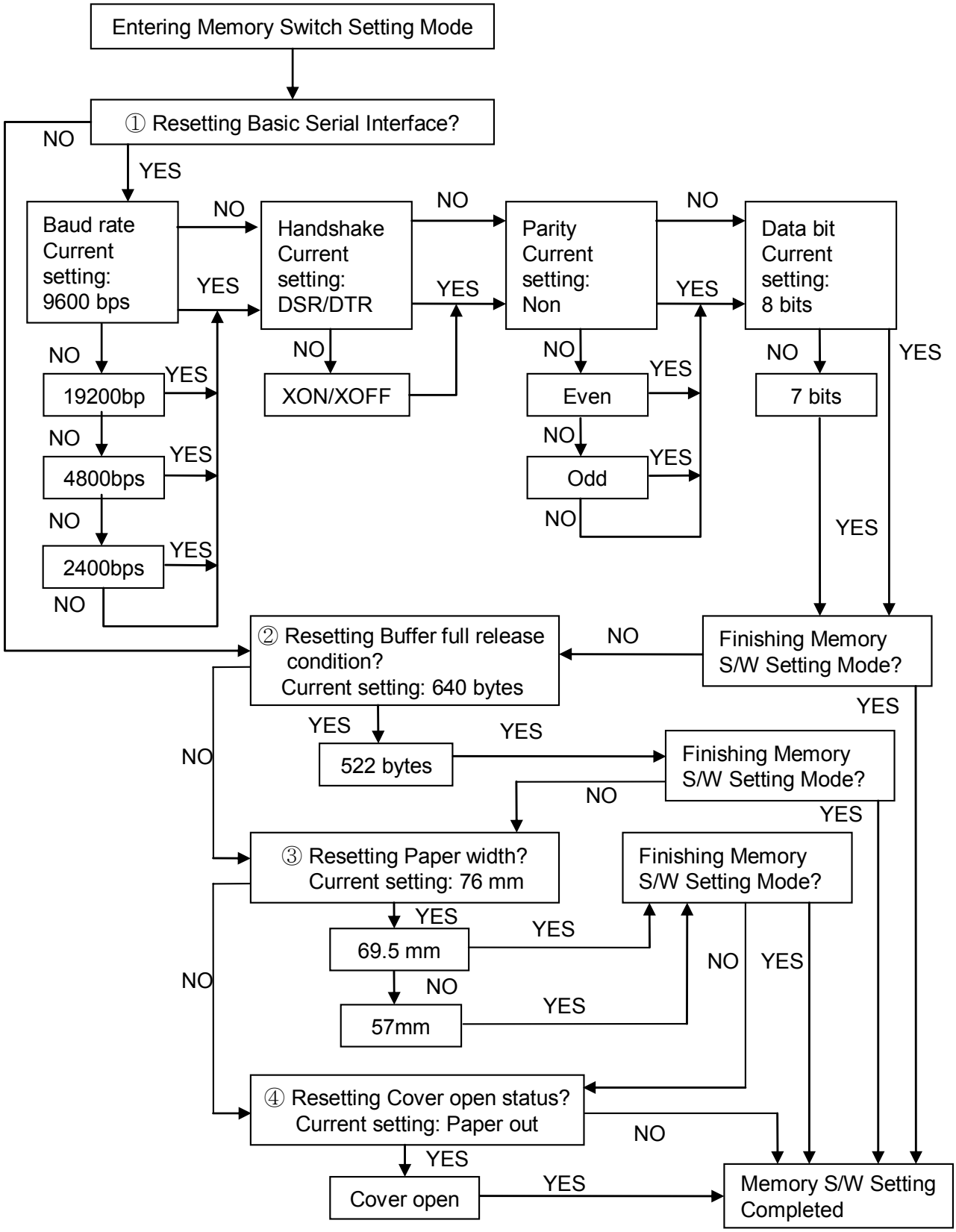

2-4-2 Memory Switch setting for Star mode

• Settings

Memory Switches are from MSW 0 to MSW 8. They are stored in non-volatile memory (flash memory). To change the settings, send the following commands from the host.

[Name] Set Memory Switch

[Code]

	ASCII	ESC	GS	#	***m N n1 n2 n3 n4*** LF NUL
	Hexadecimal	1B	1D	23	***m N n1 n2 n3 n4*** 0A 00
	Decimal	27	29	35	***m N n1 n2 n3 n4*** 10 0

[Defined Region] m = "W", "T", ",", "+", "-", "@"

"0" ≤ ***N,n1,n2,n3,n4*** ≤ "9",

"A" ≤ ***N,n1,n2,n3,n4*** ≤ "F"

[Function] Sends command to write after defining Memory Switch using the definition command specified by the following classes to set the Memory Switch. The printer is automatically reset after writing the setting defined by that command to the non-volatile memory.

Do not turn off the power to the printer while sending commands to the non volatile memory. Doing so will destroy the Memory Switch setting. It is also possible for all Memory Switch settings to become offset to their initial, default settings.

Consider the life of the non-volatile memory and avoid over-use of this command.

Function	Class	*m*	*N*	*n1 n2 n3 n4*
Data Definition (Data Specification)	Definition	","	***N***	***n1 n2 n3 n4***
Data definition (set specified bit)	Definition	"+"	***N***	***n1 n2 n3 n4***
Data definition (clear specified bit)	Definition	"-"	***N***	***n1 n2 n3 n4***
Data Definition (clear all data)	Definition	"@"	Fixed at "0"	Fixed at "0000"
Definition data write and reset	Write	"W"	Fixed at "0"	Fixed at "0000"
Definition data write and reset and test print	Write	"T"	Fixed at "0"	Fixed at "0000"

(Ex) Memory Switch 1-8 = 0; Memory Switch 2-7 = 1: Memory Switch 2-A =1 for a test print:

```
PRINT #1, CHR$(&H1B);CHR$(&H1D);CHR$(&H23);CHR$(&H2D);CHR$(&H31); ' <ESC><GS> # - 1
PRINT #1, CHR$(&H30);CHR$(&H31);CHR$(&H30);CHR$(&H30);CHR$(&H0A);CHR$(0); ' 0100 <LF><NUL>
PRINT #1, CHR$(&H1B);CHR$(&H1D);CHR$(&H23);CHR$(&H2B);CHR$(&H32); ' <ESC><GS> # + 2
PRINT #1, CHR$(&H30);CHR$(&H34);CHR$(&H38);CHR$(&H30);CHR$(&H0A);CHR$(0); ' 0480 <LF><NUL>
PRINT #1, CHR$(&H1B);CHR$(&H1D);CHR$(&H23);CHR$(&H54);CHR$(&H30); ' <ESC><GS> # T 0
PRINT #1, CHR$(&H30);CHR$(&H30);CHR$(&H30);CHR$(&H30);CHR$(&H0A);CHR$(&H0); ' 0000 <LF><NUL>
```

• Default Settings

The default settings for Memory Switch 0 to Memory Switch 8 are shown below.

Settings vary for single byte character countries (standard specifications (SBCS)) and for double-byte character countries (Chinese character specifications (DBCS)).

- Standard Specifications (SBCS)

Memory Switch Number	Ex-factory Settings (*n1*, *n2*, *n3*, *n4*)
MSW 0	"0000"
MSW 1	"0000"
MSW 2	"0000"
MSW 3	"0000"
MSW 4	"0000"
MSW 5	"0000"
MSW 6	"0000"
MSW 7	"0000"
MSW 8	"0000"

- Chinese character specifications (DBCS) (For China)

Memory Switch Number	Ex-factory Settings (*n1*, *n2*, *n3*, *n4*)
MSW 0	"0010"
MSW 1	"0000"
MSW 2	"0000"
MSW 3	"0000"
MSW 4	"0000"
MSW 5	"0000"
MSW 6	"0000"
MSW 7	"0000"
MSW 8	"0000"

• Function

- Memory Switch 0

Bit	Function	0	1
F~C	Reserved		
B~A	Red and Black (inverted black and white) Commands (*3)	Refer to the following table	
9~5	Reserved		
4	Country Specifications (*1)	SBCS (Single Byte countries)	DBCS (Double Byte countries)
3~2	<FF> Command (*2)	Refer to the following table	
1~0	Reserved		

NOTES

(*1) Country Specifications

Country	MSW 0-4 = 0	MSW 0-4 = 1
Overseas	Standard Specifications	Chinese Characters

(*2) <FF> Command Function Selection

MSW 0-3	MSW 0-2	<FF> Command Function	<FF> Command Function
Auto cutter model		Tear Bar Model (SRP-275A type)	
0	0	Executes a form feed.	Executes a form feed.
0	1	After paper fed to cutting position Executes partial cut (*3)	Paper fed to the tear-bar position
1	0	Executes a form feed.	Executes a form feed.
1	1	After paper fed to cutting position Executes partial cut (*3)	Paper fed to the tear-bar position

(*3) Red and Black (inverted black and white) Commands

MSW 0-B	MSW 0-A	<ESC> 4 / <ESC> 5 Command Functions
0	0	White/black inverted printing (1 Pass)
0	1	<Option 1> White/black inversion (7×9 font print) + enhancing (2 passes)
1	0	<Option 2> Upper line + Underline + enhancing (2 passes)
1	1	<Option 3> Upper line + Underline + double tall expanded + enhancing (4 passes)

This setting functions to specify adornments when the subsequent red (white/black inversion) print command is set. It is a substitute function for the conventional red/black (white/black inversion) printing.
<ESC> "4": Red (white/black inversion) printing
<ESC> "5": Red (white/black inversion) printing cancelled.
When using <ESC> 5 to cancel adornments, it returns to the previously set adornments. (Adornments such as underline, upper line, double-tall expanded and enhancing are cancelled if there is no command to set them (for example the <ESC> "-" 1 specification for underlines).
This setting is enabled only for ANK characters and block characters. It is disabled for IBM block characters and Chinese characters composed of 12 dot vertical characters (IBM block characters and Chinese characters do not have adornment with this command).

- Precautions for selecting Option 1.

1) Prints white/black inverted characters using 5 × 9 fonts regardless of the current font size setting.
2) Inserts a one dot string of black printing to the head of the white/black inverted characters.
3) Printing data created on a conventional red/black printer, using 1 and 2 above, there are cases in which the printing position will shift to the right and a line of printable characters reduced. (For example, to write 42 digits of red print data using conventional a 7 × 9 font, there is a line feed at the 35th digit, and the remaining 7 digits are printed on the next line.)
4) Download defined characters defined with 5 × 9 fonts are printed regardless of the current font setting (7×9/5×9).
5) MSW 3-6 must not be set to 1 (ANK character count = many). (This will cause a while line to appear between characters.)

- Precautions for selecting Option 2 and Option 3.

1) Do not apply an upper line or an underline to characters when rotating 90 or 270 degrees.

- Memory Switch 1

Bit	Function	0	1
F	Reserved		
E~5			
4	Zero style	Normal	Slash zero
3~0	International Characters (*1)	Refer to the following table	

NOTES

(*1) International Characters Default Value Settings

MSW1-3	MSW1-2	MSW1-1	MSW1-0	International Characters
0	0	0	0	U.S.A
0	0	0	1	France
0	0	1	0	Germany
0	0	1	1	U.K.
0	1	0	0	Denmark1
0	1	0	1	Sweden
0	1	1	0	Italy
0	1	1	1	Spain 1
1	0	0	0	Japan
1	0	0	1	Norway
1	0	1	0	Denmark2

- Memory Switch 2

Bit	Function	0	1
F	Reserved		
E	How to Recover to Print Ready after Inserting Paper	Press FEED.	Auto-recovery
D~C	Reserved		
B	Printing Region Width (*1)	Refer to the following table	
A	Paper Width Selection (*1)	Refer to the following table	
9~4			
3	Contextual Auto-cut Function (*2)	Disabled	Enabled
2			
1~0	Near end switch Function (*3)	Refer to the following table	

NOTES

(*1) Print Region Width (MSW 2-B)/Paper Width (MSW 2-A) Selection

MSW 2-B	MSW 2-A	Printing Region Width	Paper Width
0	0	400 half dots	76mm
0	1	300 half dots	57.5mm
1	0	385 half dots	76mm
1	1	297 half dots	57.5mm

(*2) Contextual Auto-cut Function

This function auto-cuts paper when a paper feed command that feeds continuously over 7/6 inch. Hosts that cannot send an escape sequence, such as <ESC> "d" 0 can cut paper if a 1/6 inch line feed code <LF> is sent seven times.

(*3) Near end switch Function

When an optional near end switch is mounted, settings should abide by those shown in the table below.

MSW 2-1	MSW 2-0	Near end switch Function
0	0	Disabled
0	1	Disabled
1	0	Reflects the near end switch state to the status. Printing does not stop for near end, and the printer does not go offline.
1	1	Reflects the near end switch state to the status. Printing does stop for near end, and the printer goes offline.

- Memory Switch 3

Bit	Function	0	1
F~D			
C~8	Character Table (*2)	Refer to the following table	
7~2			
1~0	<CR> Command Functions (*1)	Refer to the following table	

NOTES

(*1) <CR> Command Functions

MSW3-1	MSW3-0 <CR>	Functions
0	**0 Ignored**	
0	1 Ignored	
1	0	Prints and performs a line feed (same as <LF>.)
1	1	Prints (No line feed)

(*2) Character Table Settings

These settings are enabled only on standard specification printers.

MSW3-C	MSW3-B	MSW3-A	MSW3-9	MSW3-8	Character Table
0	0	0	0	0	Page 0 (PC437 : U.S.A.)
0	0	0	0	1	Page 1 (Katakana)
0	0	0	1	0	Page 2 (PC850 : Multilingual)
0	0	0	1	1	Page 3 (PC860 : Portuguese)
0	0	1	0	0	Page 4 (PC863 : Canadian-French)
0	0	1	0	1	Page 5 (PC865 : Nordic)
0	0	1	1	0	Page 16 (WPC1252 : Latin1)
0	0	1	1	1	Page 17 (PC866 : Russian)
0	1	0	0	0	Page 18 (PC852 : Latin2)
0	1	0	0	1	Page 19 (PC858 : Euro)
0	1	0	1	0	Page 21 (PC862 : Israel)
0	1	0	1	1	Page 22 (PC864 : Arabic)
0	1	1	0	0	Page 23 (Thai character code 42)
0	1	1	0	1	Page 24 (WPC1253 : Greek)
0	1	1	1	0	Page 25 (WPC1254 : Turkish)
0	1	1	1	1	Page 26 (WPC1257 : Baltic)
1	0	0	0	0	Page 27 (Farsi) (*3)
1	0	0	0	1	Page 28 (WPC1251 : Russian) (*3)
1	0	0	1	0	Page 29 (PC737 : Greek) (*3)
0	0	0	1	1	Page 30 (PC775 : Baltic) (*3)
1	0	1	0	0	Page 31 (Thai character code 16)
1	0	1	0	1	Page 32 (OldCode : Israel)
1	0	1	1	0	Page 33 (WPC1255 : Israel)
1	0	1	1	1	Page 34 (Thai character code 11)
1	1	0	0	0	Page 35 (Thai character code 18)

(*3) Only Font B available.

- Memory Switch 4

Bit	Function	0	1
F~9			
8	Automatic Status Function	Disabled	Enabled
7~4			
3	ESC RS a n command function	Only Setting	Auto-status sent only once
2~1			
0	Data reception error (serial)	Prints “?”	Ignored

- Memory Switch 5

Bit	Function	0	1
F~0	Reserved		

- Memory Switch 6

Bit	Function	0	1
F~A			
9	BUSY Condition	Reception Buffer or Offline	Reception Buffer Full
8~0			

- Memory Switch 7

Bit	Function	0	1
F~0	Reserved		

3. Product Specifications

3-1 Appearance

3-1-1 Printer Dimensions (mm)

• SRP-275A Type

(Approx. wt.: 2.4 kg, Shipping. Wt : 3.9 kg)

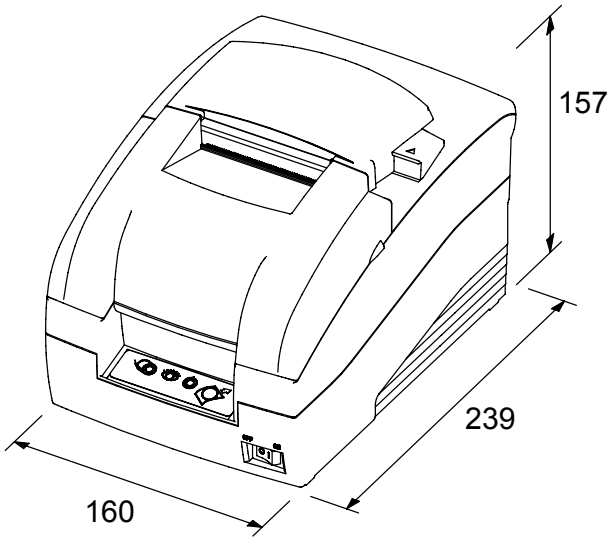

• SRP-275C Type

(Approx. wt.: 2.5 kg, Shipping. Wt : 4.0 kg)

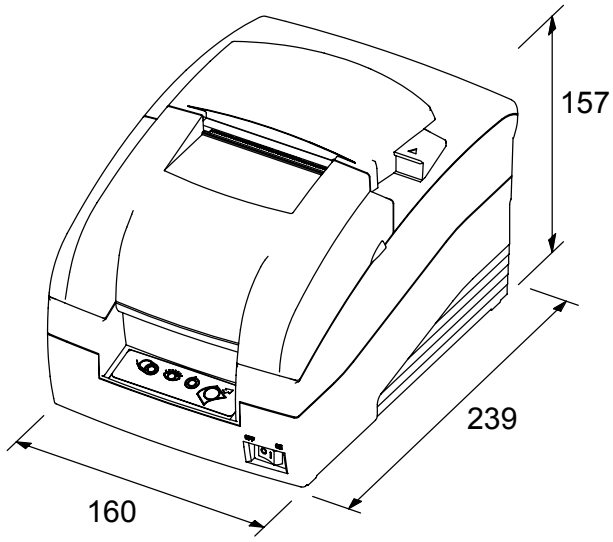

3-1-2 AC Adapter Dimensions (mm)

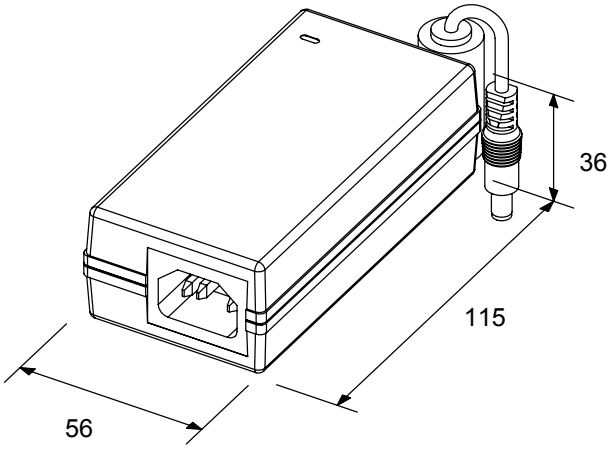

3-1-3 Feature Locations

• SRP-275A Type

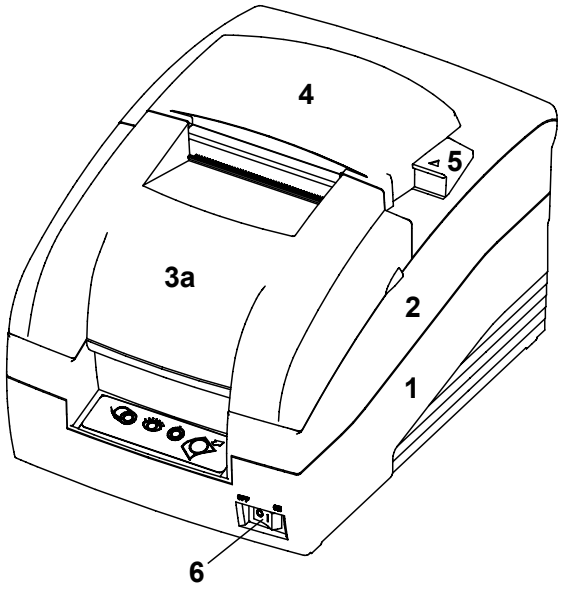

• SRP-275C Type

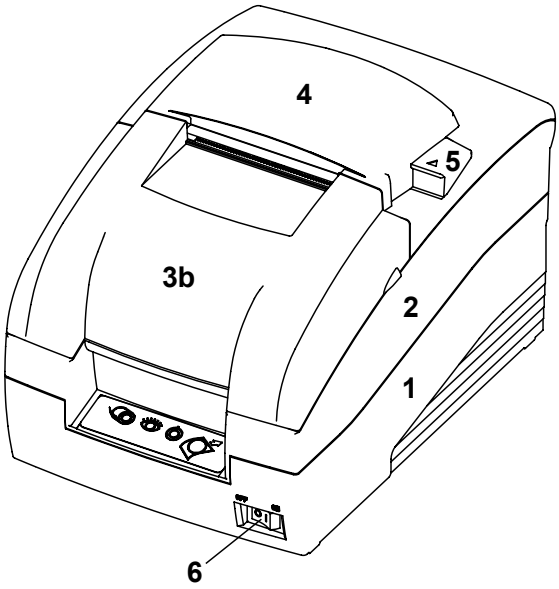

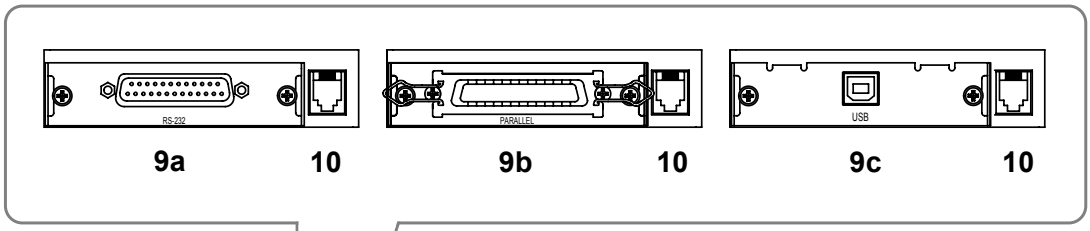

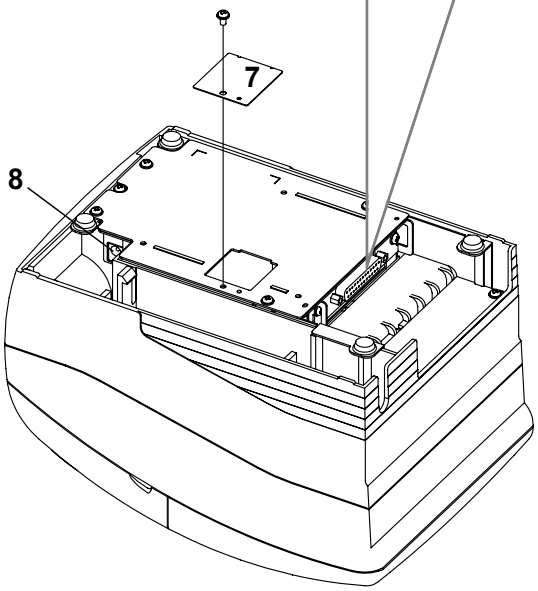

1. Cover base
2. Cover middle
3a. Cover front-A
3b. Cover front
4. Cover rear
5. Button open
6. Power switch
7. Frame-cover DIP
8. DC power jack
9a. Serial I/F connector (RS-232C)
9b. Parallel I/F connenctor (IEEE1284)
9c. USB I/F connector
10. Drawer kick-out connector

3-2 General Specifications

Item	Description	Remark
Product	• SRP-275 : RS-232 Serial communication • SRP-275P : IEEE 1284 Parallel communication • SRP-275U : USB communication	
Processor	• SAMSUNG S3C4640 (32bit)	
Memory	• Flash : 8Mbits (M29F800DB) • DRAM : 16Mbits	
Serial interface (RS-232C)	• Flow control ① DTR/DSR (H/W flow control) ② XON/XOFF (S/W flow control) • Baud rate : 2400/4800/9600/19200 • Receive buffer : 8Kbytes • Connector : DB25P female (I/F PBA side)	The flow control, Baud rate, Stop bit and Parity are determined by DIP Switch position.
Parallel interface (IEEE 1284)	• Mode ① Forward mode : Compatibility mode ② Reverse mode : Nibble / Byte mode • Connector : Self-powered	
USB	• Transfer type : BULK • Speed : 12Mbps (Full-speed) • Power : Self-Powered	
Printer	• Printing method : 9pins serial impact • Printing speed : 5.1 lines/sec	
Auto cutter	• Type : Rotary • Cutting method : 1 point partial cutting	
Power consumption	• Approx. 36W	
AC adaptor	• Input : AC 100V~240V, 50Hz~60Hz • Output : DC24V±5%, 1.5A	
Environment condition	• Temperature : 0℃~40℃ • Humidity : 30%~80%	
Weight (kg)	• Packing : Approx.3.9kg (A type) / 4kg (C type) • Unpacking : Approx. 2.4kg (A type) / 2.5kg (C type)	
Dimensions (mm)	• A / C type : 160 × 239 × 157	

3-3 Reference information

3-3-1 Printer Mechanism Specification

Item	Description	Remark
Model	SMP-715	Samsung
Printer method	Serial impact type	
Printer direction	Bi-directional with logic seeking	
Printing speed	5.1 lines/sec (9 × 7 font 40 columns)	
Printing resolution	160(W) × 144(L) DPI	
Paper feeding	Performed by step motor	
Paper	Paper roll : 76±0.5(W) × Max.Ø80 mm	
Supply voltage	• 24V±10% : Step motor, head • 5V±10% : Home position sensor, motor driver IC	
Connector	30pin (Dot head, sensor signal, motor control and power input) LIFE : Approx. 20 million print lines	
Reliability	Approx. 10 million print lines	
Head life	Approx. 300 million dots / wire	
Weight	Approx. 1.1kg (Excluding ribbon cassette, auto cutter)	

3-3-2 Printing Specification

Item	Description	Remark
Printing method	Serial impart dot	Samsung
Head wire configuration	9 pin serial type (*1)	
Dot pitch	0.352mm (1/72”)	
Dot wire diameter	0.3mm (0.01”)	
Printing direction	Bidirectional with logic seeking	
Line feed	4.233mm (1/6”) : default setting	
Paper feed method	Friction feed	
Paper feed speed	Approximately 6.2 inches/second during continuous paper feeding	
Characters per line	Refer to the following table (*2)	
Characters per inch		
Total dot count (horizontal direction)	• 7×9 font : 400 half-dot positions per line • 9×9 font : 400 half-dot positions per line	
Print speed	• 40 columns, 16cpi : Approximately 5.1 lines/second • 16 columns, 16cpi : Approximately 8.6 lines/second	

NOTES

If the print duty ratio is too high, the operation of the print head is stopped by the duty limit. In such circumstances, the print speeds shown above cannot be guaranteed.
- cpi=characters per inch

(*1) Dot configuration

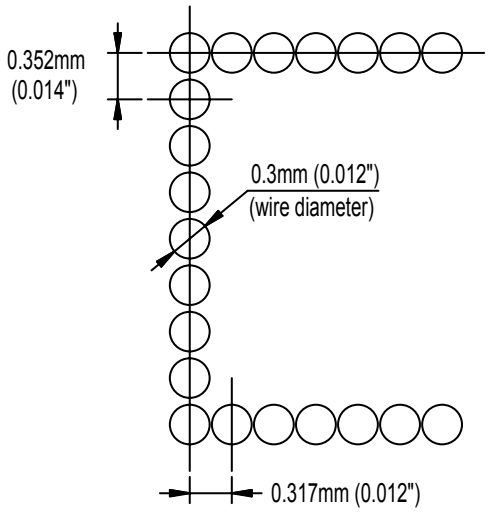

(*2) Character dimensions, characters per inch, characters per line

Character structure Horizontal×Vertical	Character structure Character Set	Character dimensions W×H	Dot spacing between characters	Characters per line (cpi)	Characters per inch (cpi)
7 × 9	ANK	1.2×3.1mm (.047×.122")	3 half dots	40	16
	Graphics	1.7×3.1mm (.070×.122")	0	40	16
9 × 9	ANK	1.6×3.1mm (.063×.122")	3 half dots	33	13.3
	Graphics	2.0×3.1mm (.079×.122")	0	33	13.3
7 × 9	ANK	1.2×3.1mm (.079×.122")	2 half dots	42	17.8
	Graphics	1.6×3.1mm (.063×.122")	0	42	17.8
9 × 9	ANK	1.6×3.1mm (.063×.122")	2 half dots	35	14.5
	Graphics	1.9×3.1mm (.075×.122")	0	35	14.5

NOTES

The default font is 7×9; the dot spacing between characters is either 3 half dots or 2 half dots, depending on programming.

3-3-3 Character Specification

Item		Description			Remark
Dot interval	H	0.3175 mm			
	V	0.3528 mm			
Font type		ASCII		Chinese	
Print font		9 x 9	7 x 9	16 x 16	
Printing columns		33	40	-	
Character size (mm) (*1)		1.7 x 3.2	1.4 x 3.2	5.7 x 3.0	
Column interval (mm)		2.13	1.59	3.19	
Line interval		1/6"	1/6"	1/3"	
Character sets		• Alphanumeric characters : 95 • International characters : 32 • Extended graphics : 128 x 20 pages			
Character structure		• 7×9 with 400 half-dot positions per line • 9×9 with 400 half-dot positions per line			

NOTES

(*1) Character size 7×9 font example

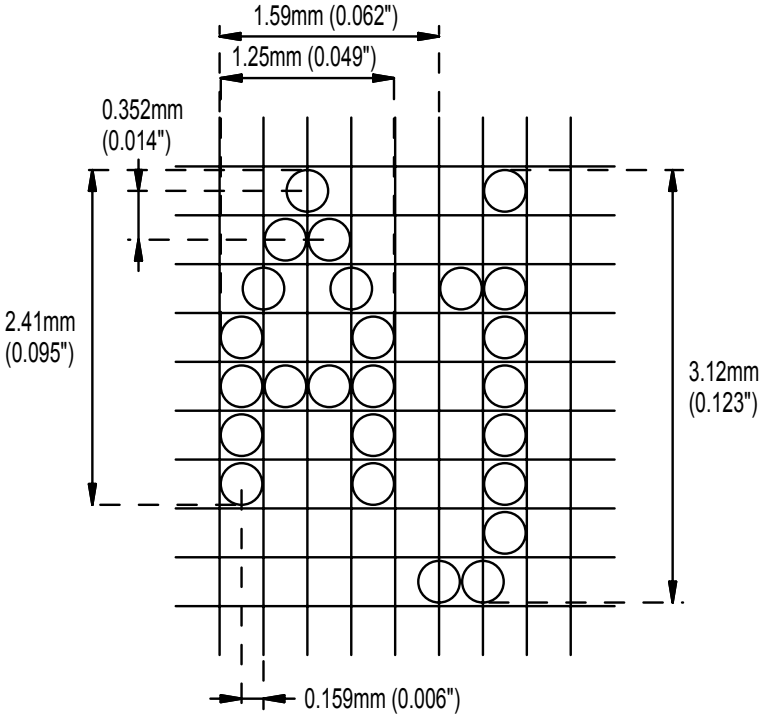

3-3-4 Paper Specification

Item	Description	Remark
Paper type	Paper roll	
Paper roll width	• 76±0.5 mm (2.99±0.02”) • 69.5±0.5 mm (2.74±0.02”) • 57.5±0.5mm (2.26±0.02”)	
Paper roll diameter	Max. ø83 mm (3.27")	
Normal paper	• Thickness : 1 sheet 0.06~0.085 mm (0.0024~0.0034") • Weight : 52.3~64g/m^2 (0.115~0.1411 lb)	

NOTES

• **Printing area**

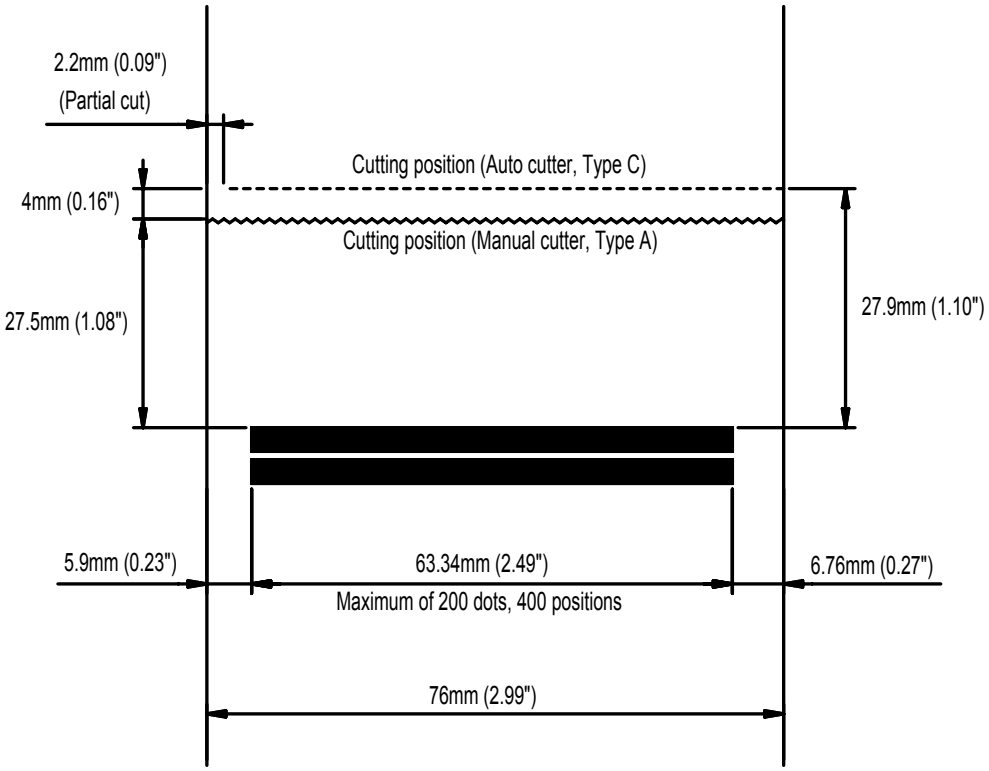

3-3-5 Ribbon Cassette Specification

Item	Description	Remark
Model	RRC-275 B/R	
Color	Black & Red	
Size	13 mm (W) × 6 mm (L)	
Life (*1)	• Black : 1.5 million characters (with continuous printing at 25℃ (77°F)) • Red : 750,000 characters (with continuous printing at 25℃ (77°F))	

NOTES

(*1) Ribbon life

Ribbon life is based on the following conditions:
Character font: 7×9 font (with descenders)
Print pattern: ASCII 96-character rolling pattern. See the example of self test sheet.

Malfunctions and other problems may arise if other than specified ribbon cassettes are used in the printer. The Warranty may be void if other than specified ribbon cassettes are used. Contact your dealer or place of purchase for more information about proper ribbon cassettes.

3-3-6 Environment Conditions

Item	Description	Remark
Temperature	• Operating : 0℃~50℃ (32°F~122°F). At 34℃(93°F) or higher, there are humidity restrictions; refer to the following figure. (*1) • Storage : -10℃~50℃ (14°F~122°F) • Shipping : -40℃~70℃ (-40°F~122°F), except paper and ribbon	
Relative humidity	• Operating : 10~90% RH (Non-condensing) • Storage : 10~90% RH (Non-condensing) • Shipping : 5~90% RH (Non-condensing), except paper and ribbon	
Vibration resistance	• When packed - Frequency: 5 to 55Hz - Acceleration: 5G - Sweep: 10 minutes (half cycle) - Duration: 1 hour - Direction: x, y and z	
Impact resistance	• When packed - Package: SRP-275 standard package - Height: 60cm (23.62") - Directions: 1 corner, 3edges and 6 surfaces • When unpacked - Height: 5cm (1.97") - Direction: Life on edge and release it (for all 4 edges)	

NOTES

(*1) Operation temperature and humidity range

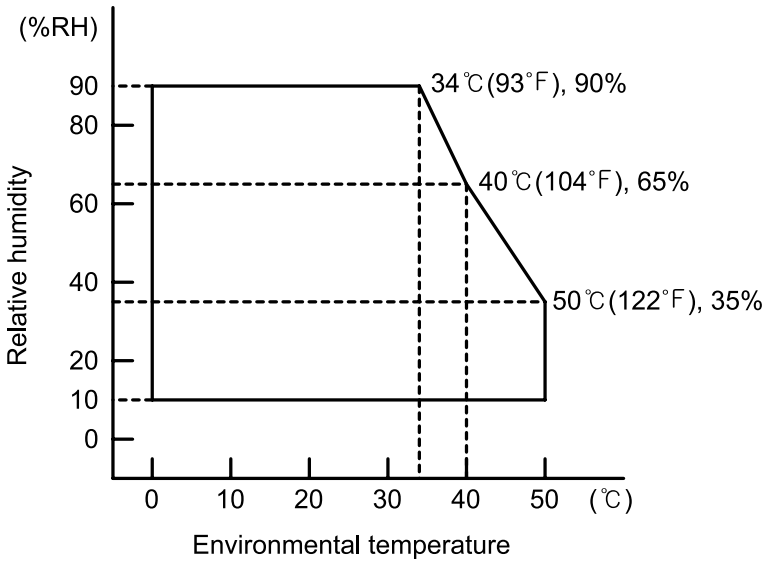

3-3-7 Reliability

Item	Description	Remark
Life	• Mechanism : Approx. 10 million lines • Auto cutter : Approx. 1 million cuts (End of life is defined as the point at which the printer reaches the beginning of the Wear out Period.)	
Head	Approx. 300 million dots/wire	

3-3-8 Certification

Item	Description	Remark
Europe	CE marking, TUV/GS : EN60950-1; 2001	
North America	EMI : FCC Class A	
Safety standards	UL / C-UL : UL60950-1	
National	CB-scheme : IEC 60950-1: 2001	
EMC Directive 89/336/EEC	• EN55022 Class A : 1998+A1 : 2000 • EN55024 : 1998:+A1 : 2001 • EN61000-3-2 : 2000 • EN61000-3-3 : 1995+A1 : 2001	
Low voltage Directive 73/23/EEC	Safety : EN60950-1 : 2001	

3-3-9 Printer(SMP715) pin Descriptions

Pin No.	Pin name	Description
1	Thermistor	Thermistor Output Value in Printer Head
2	GND	-
3	Printer Head	Head #7
4	Printer Head	Head #1
5	Printer Head	Head #5
6	Printer Head	Head #3
7	VCC_24V	The Voltage for Driving Print Heads
8	VCC_24V	The Voltage for Driving Print Heads
9	VCC_24V	The Voltage for Driving Print Heads
10	Printer Head	Head #2
11	Printer Head	Head #9
12	Printer Head	Head #4
13	Printer Head	Head #8
14	Printer Head	Head #6
15	VCC_5V	Sensor and Motor Driving
16	H/S Output	Head home position check
17	Carriage Motor_PA	Phase PA of the Carriage Motor
18	Carriage Motor_PAn	Phase PAn of the Carriage Motor
19	Carriage Motor_PB	Phase PB of the Carriage Motor
20	Carriage Motor_PBn	Phase PBn of the Carriage Motor
21	Carriage Motor ON/OFF	Control Driving voltage or Holding Voltage Of Carriage Motor
22	Feed Moter A	Phase A of the Feed Motor
23	Feed Moter An	Phase An of the Feed Motor
24	Feed Moter B	Phase B of the Feed Motor
25	Feed Moter Bn	Phase Bn of the Feed Motor
26	VCC_24V	The Voltage for Driving Motors
27	VCC_24V	The Voltage for Driving Motors
28	SOL	Ribbon solenoid down
29	GND	-
30	GND	-

3-3-10 Printer Head Specification

Item	Description	Remark
Model	N09-15KS	
Specification	Type : Ballistic type (Free fight)	
	Number of wire : 9pins	
	Dot pitch : 0.352 (1/72")	
	Dot wire diameter : 0.3mm (0.01")	
Solenoid coil	Resistance : 18Ω ± 1.5Ω (at 20℃)	
	Inductance : 4.2mH ± 10% open circuit (at 1000Hz, 1VRMS)	
	Temperature rate : 155℃	
	Insulation resistance : 20MΩ with 500V/DC	
Driver circuit	Type : Constant voltage	
	Voltage : 24VDC±5% (Normal) (At printer head)	
	Current : 1.3A	
	Pulse : 330μsec (Head on time)	
Performance	Platen Gap : 0.40 ~ 0.50mm	
	Max. frequency : 1500Hz	
	Forms capability : Original + 2 copies	
Temperature	Max. operating temp. : 90℃	
	Max. transient temp. : 110℃ ,For 5 minutes (25% duty)	

3-3-11 Printer Head Thermistor Specification

Item	Description	Remark
Type	NTC, F-CHIP FF103J	
Electronic Characteristics	• Resistance R25: 10kΩ ± 5Ω (At 25℃) • β Value : 3950K ± 2	
Temperature strage	–30℃ ~ 125℃	
Rx formula	Exp(-4.864010225 + 4344.5751119/T - 13183560.21/T^3)	T : Absolute temperature

3-3-12 PF(Paper Feed) Motor Specification

Item	Description	Remark
Model	PM42L-048-YKG3 (MINEBEA ELECTRONICS Co.Ltd)	NMB
Voltage	24VDC±10%	
Current	500mA / Phase (Peak)	
Resistance	7.4Ω ± 5% at 25℃	
Step angle	7.5°	
Pull out torque	800 PPS 590 g·cm	

3-3-13 HF(Head Feed) Motor Specification

Item	Description	Remark
Model	PM42S-048-SYM (MOATECH Co., Ltd)	
Voltage	24VDC±10%	
Current	640mA / Phase (Peak)	
Resistance	10	
Step angle	7.5°	
Pull out torque	1300 PPS 324 g·cm	

3-3-14 Auto Cutter Specification

Item	Description	Remark
Type	Rotary	
Motor	DC Brush motor FK-130SH (Mabuchi Motor)	
Voltage	24VDC ± 10%	
Current	0.4A (mean) , 1.6A (peak)	

3-3-15 Switch(Sensor) Specification

Item	Description	Remark
Paper end switch	Micro switch (MIC)	
Paper near end switch	Micro switch (MIC)	
Paper near end-W switch	Micro switch (MIC)	Wall mount
Cover open switch	Micro switch (MIC)	

3-4 SMPS Specifications

3-4-1 SMPS (Switching Mode Power Supply) Specification

Item	Description	Remark
Input voltage	100VAC~240VAC	
Input current	Max. 1.5A	
Line regulation	+24V±1%	
Load regulation	+24V±5%	
Ripple noise	Peak 300mV	
O.C.P	3.0A	(Over current protect)

3-4-2 SMPS Output Connector

Pin number	Signal name
1	+24VDC
2	GND

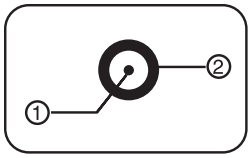

3-5 Interface Specifications

3-5-1 RS-232C Serial Interface

3-5-1(a) Specification

Item	Description	Remark
Data transmission	Serial	
Synchronization	Asynchronous	
Handshaking (Flow control)	H/W : DTR / DSR S/W : XON / XOFF	XON : ASC code 11 XOFF : ASC code 13
Signal level	• Logic "1" (MARK) : -3V~-15V • Logic "0" (SPACE) : +3V~+15V	
Baud rate	19200 / 2400 / 4800 / 9600 bps	
Data word length	7 bit / 8 bit	
Parity	None / Even / Odd	
Connector	DB25P female (I/F PBA)	

NOTES

The handshaking (Flow control) / Data word length / Baud rate / Parity functions depend on the DIP Switch settings. Refer to the Service manual.

3-5-1(b) RS-232C I/F Cable

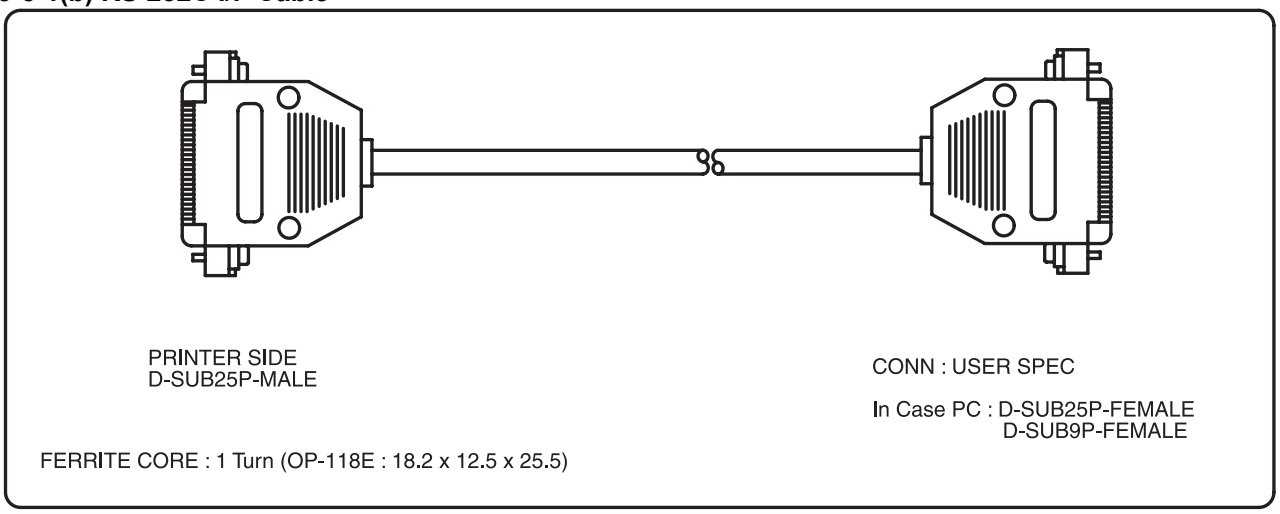

3-5-1(c) Cable Connection

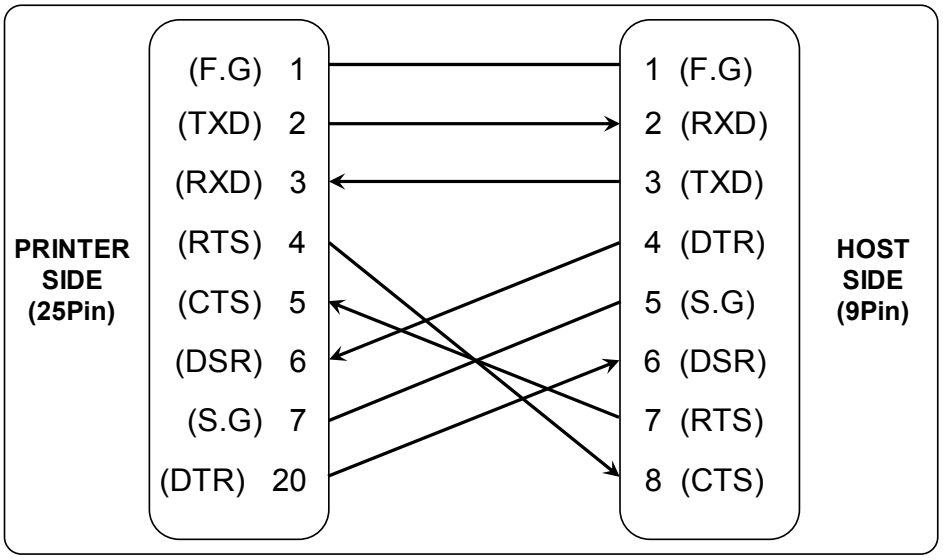

3-5-1(d) Signal Description

Pin No.	Signal name	Signal direction	Function
Body	Frame GND	-	Frame ground
2	TXD	Output	Transmit data
3	RXD	Input	Receive data
6	DSR	Input	This signal indicates whether the host computer can receive data. (H/W flow control) ① MARK(Logic 1) : The host can not receive a data. ② SPACE(Logic 0) : The host can receive a data. ③ The printer transmits a data to the host, after confirming this signal. ④ When XON/XOFF flow control is selected, the printer does not check this signal.
7	Signal GND	-	Signal ground
20	DTR	Output	This signal indicates whether the printer is busy. (H/W flow control) ① MARK(Logic 1) : The printer is busy. ② SPACE(Logic 0) : The printer is not busy. ③ The host transmits a data to the printer, after confirming this signal. ④ When XON/XOFF flow control is selected, the host does not check this signal.

3-5-1(e) H/W Flow Control

When DTR/DSR flow control is select, before transmitting a data, the Printer checks whether the host is BUSY or not. If the host is BUSY, the Printer does not transmit a data to the host. If the host is not BUSY, the Printer transmits a data to the Host. The host is the same.

3-5-1(f) S/W Flow Control

When XON/XOFF flow control is selected, the printer transmits XON(ASCII 11h) or XOFF(ASCII 13h) signal through the TXD line. If the printer is busy, the printer transmits XOFF(ASCII 13h) to host through the TXD line. Then the host recognize that the printer is busy. So, the host does not transmit a data to the printer. If printer is released from busy, the printer transmits XON(ASCII 11h) to host through the TXD line. Then the host recognize that the printer is not busy. And the host transmit a data to the printer.

3-5-2 IEEE1284 Parallel Interface
Bi-directional parallel interface : In accordance with the IEEE 1284 Nibble / Byte mode

3-5-2(a) Forward Mode Specification (Compatibility mode)
Data transmission from host computer to printer : Centronics compatible

Item	Description	Remark
Data transmission	• 8 bit parallel	
Synchronization	• External supplied nStrobe signals	
Handshaking	• nACK and Busy signals	
Signal level	• TTL compatible	
Connector	• IEEE1284 TYPE-B	

3-5-2(b) Reverse Mode Specification (Nibble / Byte mode)
Data transmission from the printer to the host computer. The STATUS data transmission from the printer to the host computer is accomplished in the Nibble or Byte mode. This mode allows data transmission from the asynchronous printer under the control of the host computer. Data transmission in the Nibble mode are made via the existing control lines in units of bits(Nibble). In the Byte mode, data transmission are proceeded by making the 8-bits data lines bidirectional. Neither mode can operate at the same time as the compatibility mode, so switching is always required.

3-5-2(c) Signal Specification (Compatibility/Nibble/Byte mode)

Pin no.	Source	Compatibility mode	Nibble mode	Byte mode
1	Host	nStrobe	HostClk	HostClk
2	Host / Printer	Data 0 (LSB)	-	Data 0 (LSB)
3	Host / Printer	Data 1	-	Data 1
4	Host / Printer	Data 2	-	Data 2
5	Host / Printer	Data 3	-	Data 3
6	Host / Printer	Data 4	-	Data 4
7	Host / Printer	Data 5	-	Data 5
8	Host / Printer	Data 6	-	Data 6
9	Host / Printer	Data 7 (MSB)	-	Data 7 (MSB)
10	Printer	nAck	PtrClk	PtrClk
11	Printer	Busy	PtrBusy / Data3,7	PtrBusy
12	Printer	Perror	AckDataReq / Data2,6	AckDataReq
13	Printer	Select	Xflag / Data1,5	Xflag
14	Host	nAutoFd	HostBusy	HostBusy
15	-	NC	ND	ND
16	-	GND	GND	GND
17	-	GND	FG	FG
18	Printer	Logic-H	Logic-H	Logic-H
19~30	-	GND	GND	GND
31	Host	nInit	nInit	nInit
32	Printer	nFault	nDataAbail /	nDataAvail
33	-	NC	ND	ND
34	Printer	NC	ND	ND
35	Printer	NC	ND	ND
36	Host	nSelectIn	1284-Active	1284-Active

3-5-2(c) IEEE1284 I/F Cable

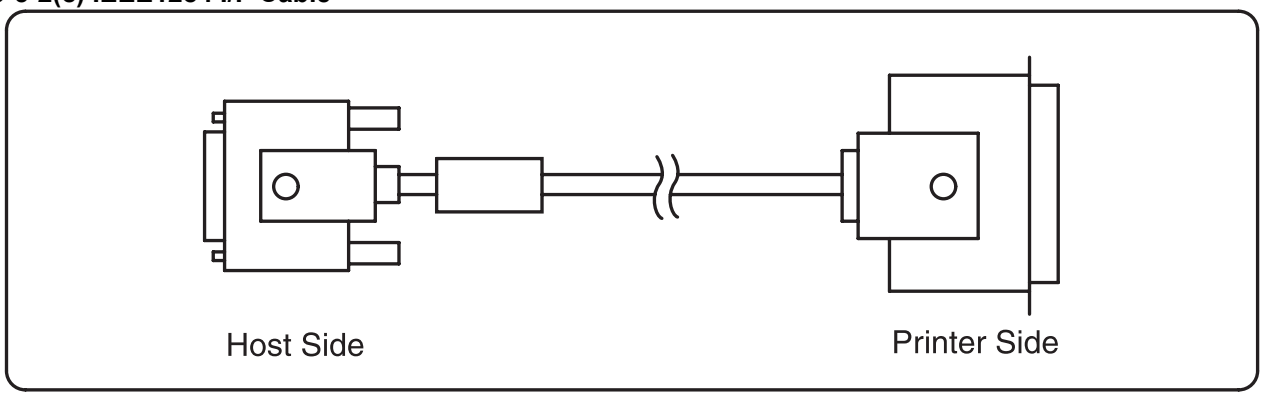

3-5-3 USB Interface

SRP-275 support the USB (Universal Serial Bus) Communication.

3-5-3(a) Specification

Item	Description	Remark
Transfer type	• BULK	
Data Signal	• Bi-direction, Half-duplex • Differential signal pair (D+ / D-)	
Data format	• NRZI format • Zero bit stuffing after 6 ones	
Transceiver	• Differential receive sensitivity : 200 mV • Differential common mode range : 0.8~2.5 V • Single-end receiver threshold : 0.8~2.0 V	
Speed	• 12 Mbps	
Power	• Self-powered	
Cable & connector	• Cable : 5m / 2m • Connector : A/B type	
Other	• Support USB spec V1.1	

3-5-3(b) Signal Description

Pin No.	Signal name	Assignment (Color)	Function
Shell	Shield	Drain wire	Frame ground
1	VBUS	Red	NC
2	D-	White	Differential data line
3	D+	Green	Differential data line
4	GND	Black	Signal ground

3-5-3(c) USB I/F Cable

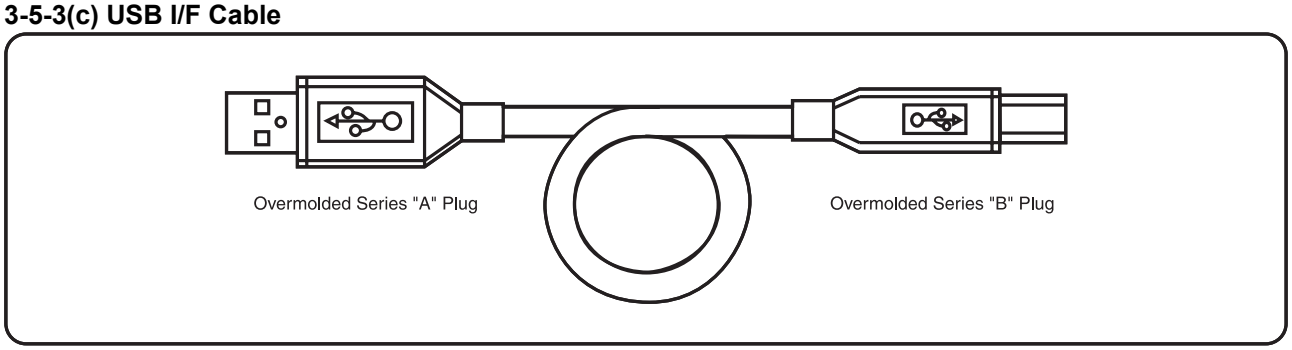

3-6 Drawer Kick-Out Specifications

3-6-1 Drawer Cable

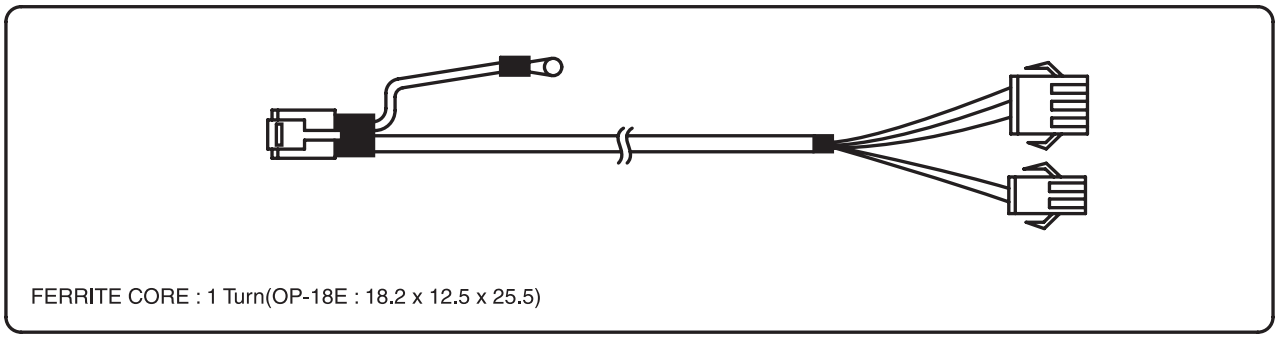

FERRITE CORE : 1 Turn(OP-18E : 18.2 x 12.5 x 25.5)

3-6-2 Cable Connection

Pin No.	Description	Direction
1	Signal GND	-
2	Drawer kick-out driver signal #1	Output
3	Drawer Open / Close signal	Input
4	+24V	-
5	Drawer kick-out driver signal #2	Output
6	Signal GND	-

4. Hardware

4-1 Wiring Diagram

4-1-1 Main board wiring diagram

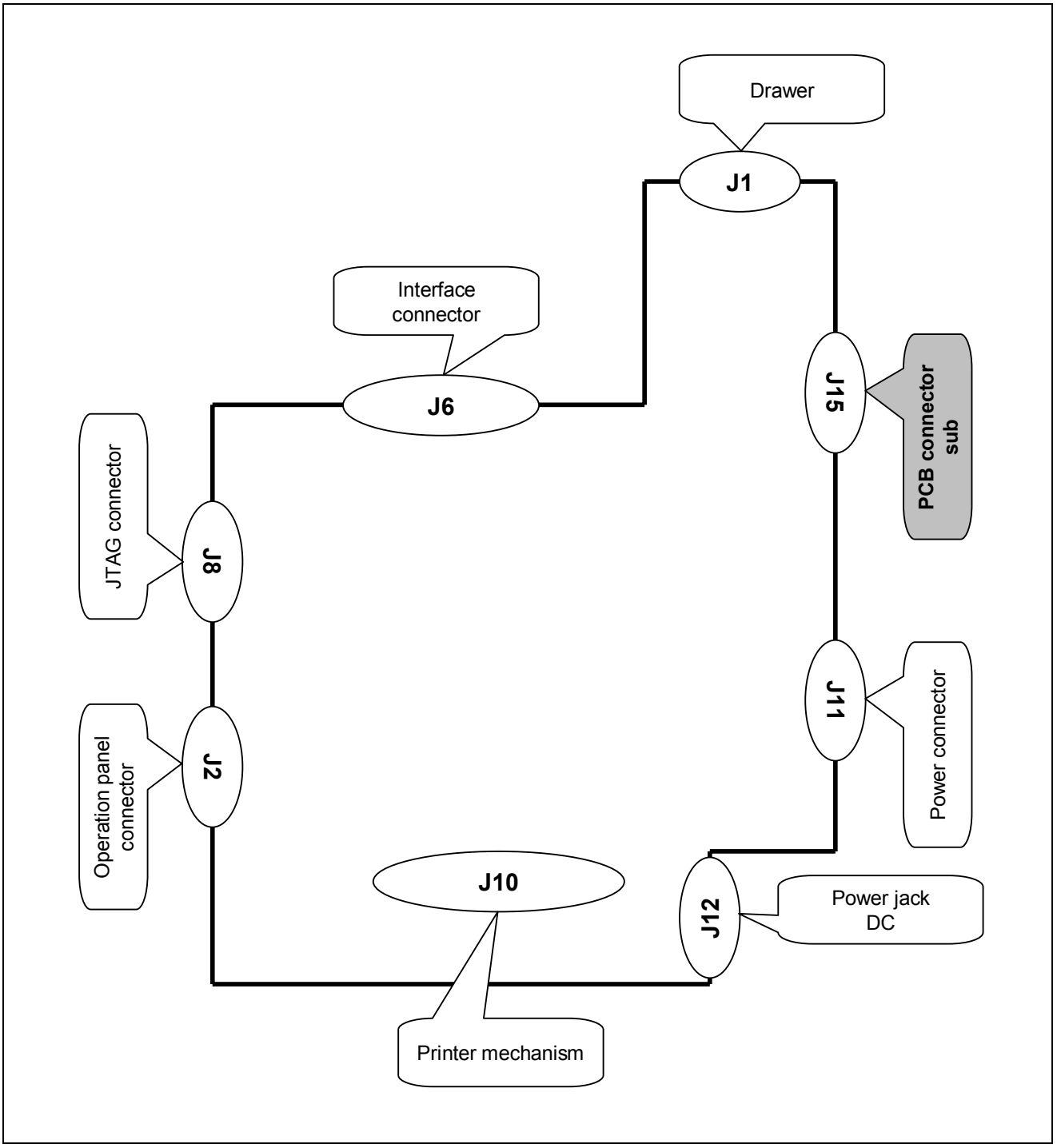

4-1-2 Connector sub PCB wiring diagram

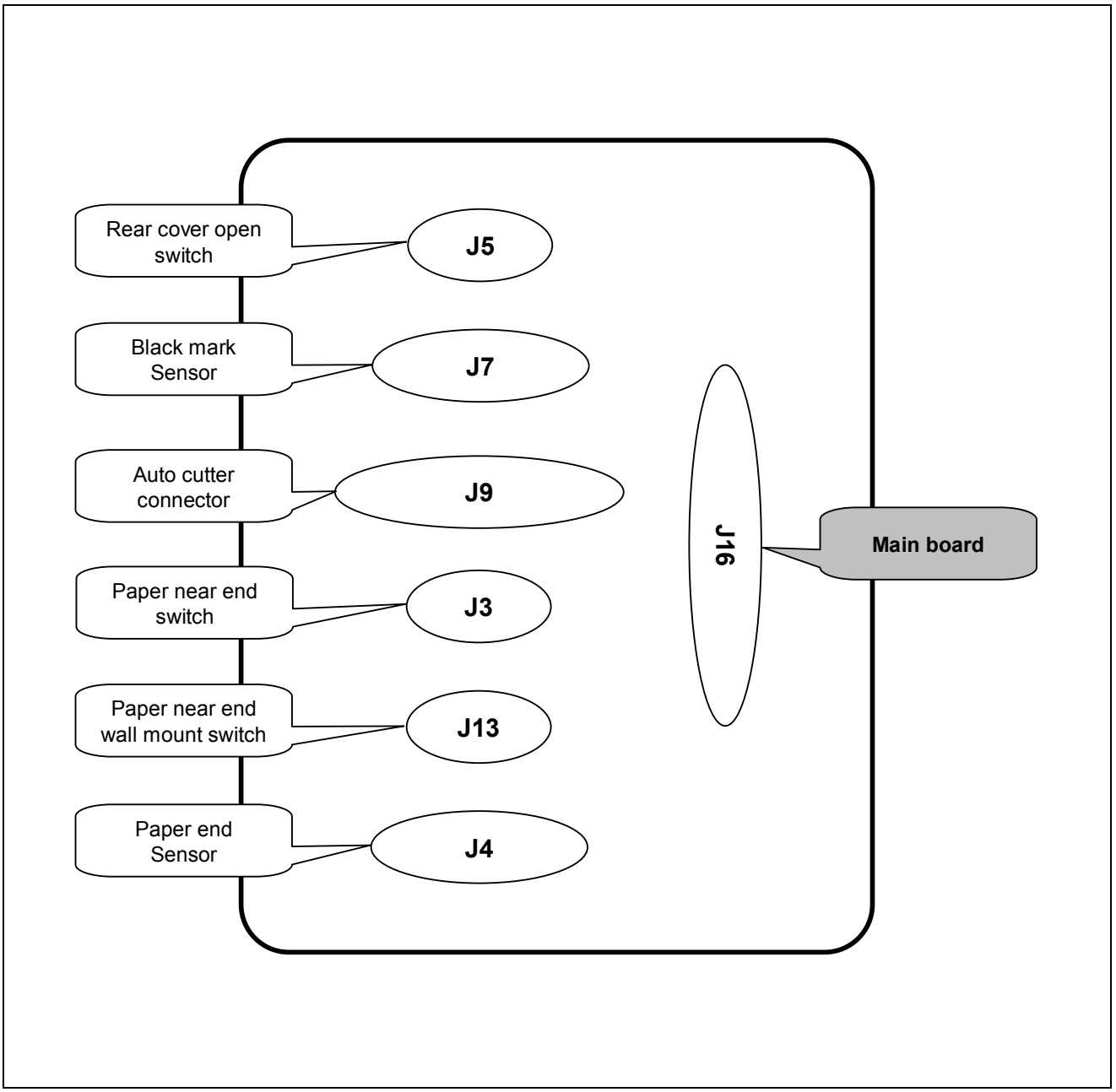

4-2 Block Diagram

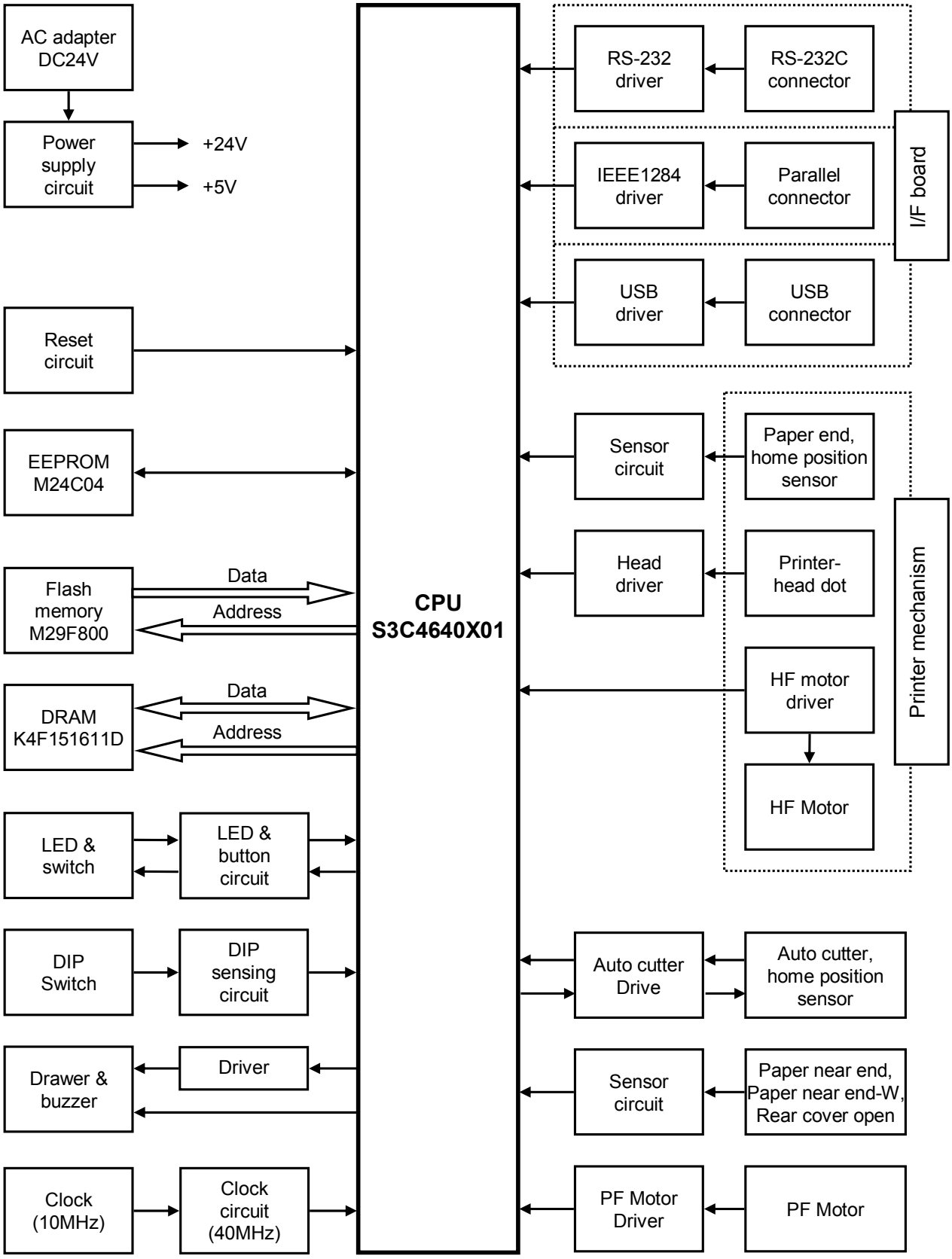

4-3 PCB Layout & Part List

4-3-1 Main Board

* Type of SRP-275A : blue color
* Type of SRP-275C : green color

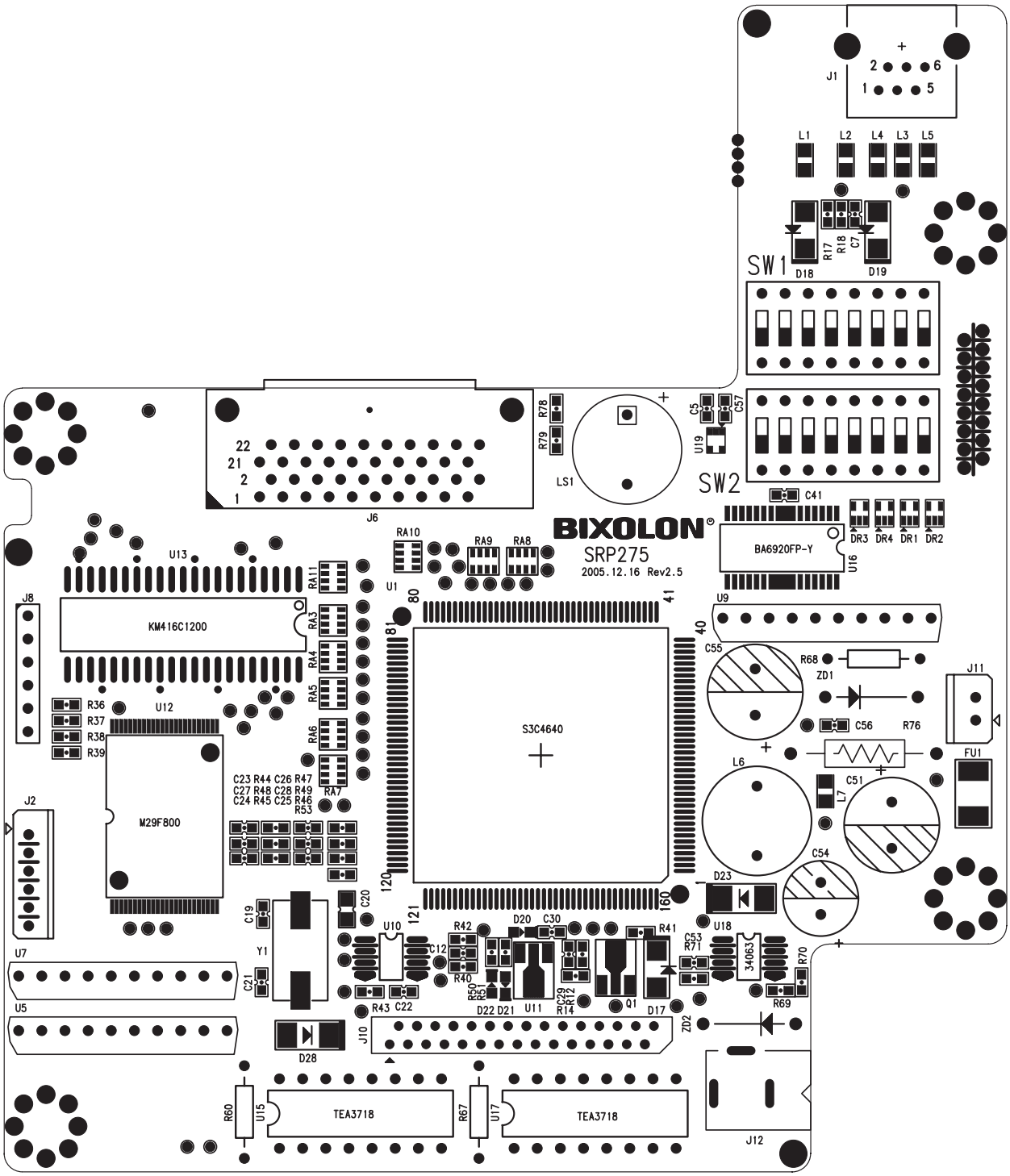

[[Top view]

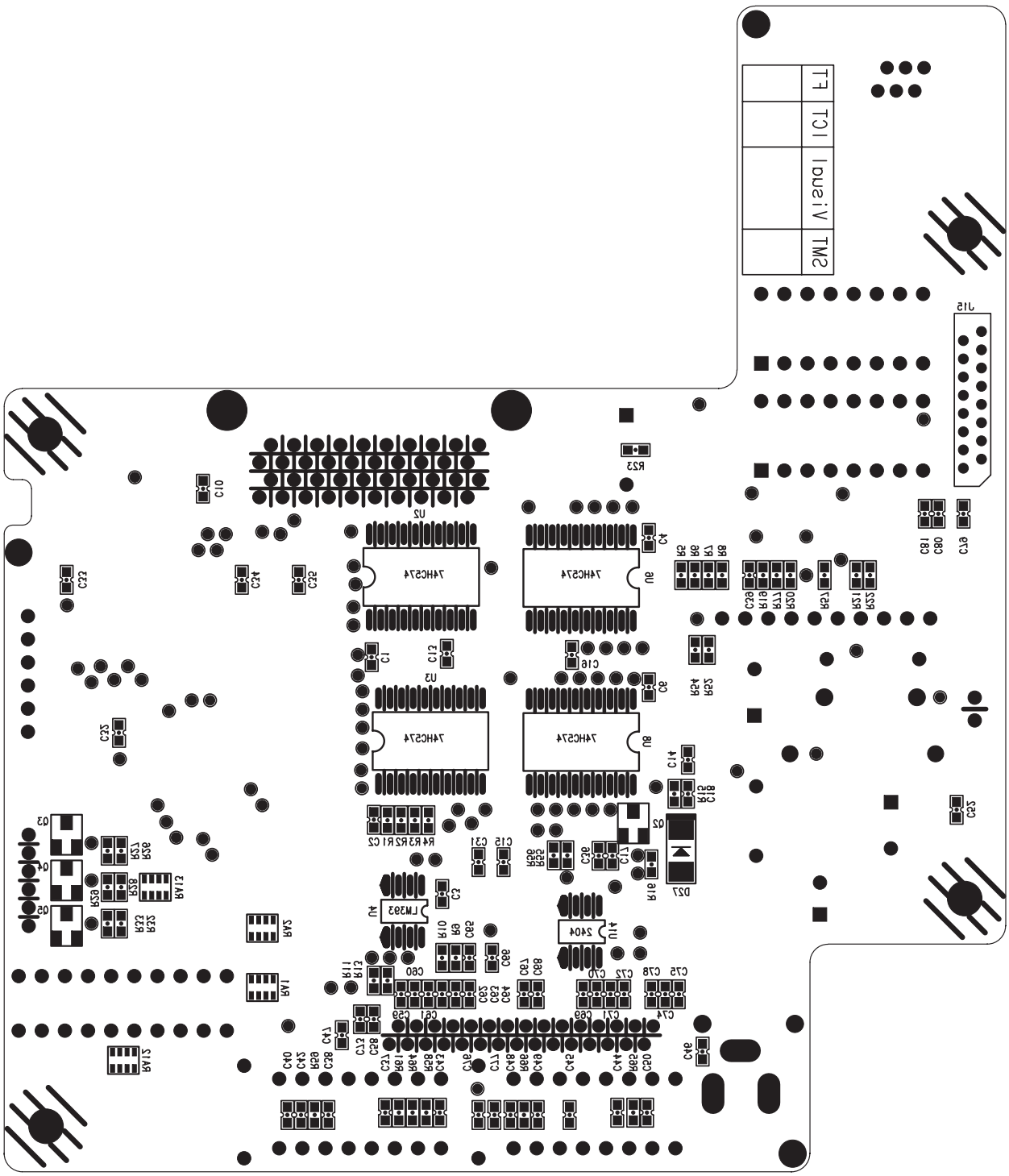

[Bottom view]

*** Type of SRP-275A (SRP-275MBA)**

No.	Code no.	Description	Specification	Q'ty	Location	Serviceable
9-3	AP02-00063A	SRP-275MBAS	ASS'Y (A TYPE,STD)	1		Y
	AP02-00063D	SRP-275MBAG	ASS'Y (A TYPE,GB2312)	1		Y
	AP02-00063E	SRP-275MBAB	ASS'Y (A TYPE,BIG5)	1		Y
9-3-1	K302-00011A	PCB-MAIN	4-LAYER, FR-4,T1.6	1		N
9-3-2	0903-001282	IC-MICROCONTROLLER	S3C4640, 32BIT,QFP,160P	1	U1	Y
9-3-3	0506-001019	IC-TR-ARRAY	STA471A,NPN,4,4W	3	U5, U7, U9	Y
9-3-4	0801-000718	IC (3 STATE OUT NONINVERT)	74HC574,SOIC20	4	U2, U3, U6, U8	Y
9-3-5	1003-001102	IC-MOTOR DRIVER	TEA3718DP,DIP,16P	2	U15, U17	Y
9-3-6	1103-001096	IC-EEPROM	24LC04B, SOIC8	1	U14	Y
9-3-7	1105-001394	IC-DRAM	K4F151611D-JL60, SOJ42,	1	U13	Y
9-3-8	1107-001121	IC-FLASH MEMORY	M29F800DB,TSOP48	1	U12	Y
9-3-9	1202-000188	IC-VOLTAGE COMP.	10393,SOP,8P,244MIL,	1	U4	Y
9-3-10	1203-000404	IC-INVERTING SWITCH REGULATOR	MC34063A,SOP,8P,150M	1	U18	Y
9-3-11	1203-002523	IC-VOL. DETECTOR	KIA7045,SOT-89,4P,98MIL	1	U11	Y
9-3-12	4701-001037	IC-FREQ-ATTENUATOR	FS784,SOIC,8P,6to82MHz	1	U10	Y
9-3-13	K502-00033A	IC (2INPUT AND GATE)	NC7S08P5X,5PIN, SC70	1	U19	Y
9-3-14	K702-00023A	DIODE-ARRAY	UMP1N	4	DR1, DR2, DR3, DR4	Y
9-3-15	0401-001110	DIODE-SWITCHING	1SS400,80V,300MA	3	D20, D21, D22	Y
9-3-16	0402-000309	DIODE-RECTIFIER	1SR154-400,400V,1A,S	3	D17, D18, D19	Y
9-3-17	0402-001389	DIODE-RECTIFIER	RB050L-40,40V,3A,SOD	3	D23, D27, D28	Y
9-3-18	0406-000129	DIODE-TVS	P6KE6.8A,6.45/6.8/7.	1	ZD2	Y
9-3-19	0406-001158	DIODE-TVS	P6KE30A,28.50-31.50V	1	ZD1	Y
9-3-20	0501-000457	TR-SMALL SIGNAL	MMBT2222ALT1,NPN	4	Q2, Q3, Q4, Q5	Y
9-3-21	0503-001037	TR-DARLINGTON	2SD2170,NPN,2W,SC-62	1	Q1	Y
9-3-22	2011-000005	R-ARRAY	220ohm, 5%, 1/16W, 8PIN	2	RA1, RA2	Y
9-3-23	K802-00034A	R-ARRAY	100ohm, 5%, 1/16W, 8PIN	9	RA3, RA4, RA5, RA6, RA7, RA8, RA9, RA10, RA11	Y
9-3-24	K802-00039A	R-ARRAY	330ohm, 5%, 1/16W, 8PIN	2	RA12, RA13	Y
9-3-25	2001-000015	R-CARBON(S)	0.5ohm.5%.1/2W.AA.TP	2	R60, R67	Y
9-3-26	K802-00066A	R-CARBON(S)	0.47ohm,5%,1/2W,AA,T	1	R68	Y
9-3-27	2005-000419	R-WIRE WOUND	0.33ohm,1%,1W,AA,TP	1	R76	Y
9-3-28	2007-000052	R-CHIP	10Kohm,1%,1/16W,1608	1	R64	Y
9-3-29	2007-000070	R-CHIP	0ohm,5%,1608 TP	3	R23, R53, R54	Y
9-3-30	2007-000074	R-CHIP	100ohm,5%,1/16W,1608	6	R44, R45, R46, R47, R48, R49	Y
9-3-31	2007-000078	R-CHIP	1Kohm,5%,1/16W,1608	7	R9, R14, R16, R18, R51, R58, R65	Y
9-3-32	2007-000082	R-CHIP	3.3Kohm.5%,1/16W,1608	1	R43	Y
9-3-33	2007-000084	R-CHIP	4.7Kohm,5%,1/16W,1608	10	R1, R2, R3, R4, R15, R17, R20, R21, R22, R71	Y
9-3-34	2007-000090	R-CHIP	10Kohm.5%,1/16W,1608	10	R11, R36, R37, R38, R39, R41, R50, R52, R55, R56	Y
9-3-35	2007-000092	R-CHIP	15Kohm,5%,1/16W,1608	4	R5, R6, R7, R8	Y
9-3-36	2007-000094	R-CHIP	22Kohm,5%,1/16W,1608	2	R78, R79	Y
9-3-37	2007-000098	R-CHIP	56Kohm,5%,1/16W,1608	2	R59, R66	Y
9-3-38	2007-000539	R-CHIP	200ohm,5%,1/16W,1608	2	R40, R42	Y
9-3-39	2007-000704	R-CHIP	3.6Kohm,5%,1/16W,1608	3	R27, R29, R33	Y
9-3-40	2007-000803	R-CHIP	36Kohm,1%,1/16W,1608	1	R69	Y
9-3-41	2007-000965	R-CHIP	5.1Kohm,5%,1/16W,1608	6	R10, R12, R26, R28, R32, R57	Y
9-3-42	2007-001433	R-CHIP	12Kohm,1%,1/16W,1608	1	R70	Y
9-3-43	2007-007440	R-CHIP	510ohm,1%,1/16W,1608	1	R61	Y
9-3-44	K802-00038F	R-CHIP	1.5Kohm, 1%, 1/16W,1608	1	R13	Y
9-3-45	K804-00009A	R-CHIP	220ohm,5%,1/16W,1608	1	R19	Y
9-3-46	K804-00027A	R-CHIP	330ohm, 5%, 1/16W,1608	1	R77	Y

No.	Code no.	Description	Specification	Q'ty	Location	Serviceable
9-3-47	2203-000236	C-CERAMIC,CHIP	0.1nF,5%,50V,C0G,1608	25	C30, C58, C59, C60, C61, C62, C63, C64, C65, C66, C67, C68, C69, C70, C71, C72, C73, C74, C75, C76, C77, C78, C79, C80, C81	Y
9-3-48	2203-000476	C-CDRAMIC.CHIP	1000nF,+80-20%,2012	1	C20	Y
9-3-49	2203-000626	C-CERAMIC,CHIP	0.022NF.5%.50V.1608	12	C12, C19, C21, C23, C24, C25, C26, C27, C28, C40, C41, C48	Y
9-3-50	2203-001222	C-CERAMIC.CHIP	820pF,10%,50V,1608	5	C22, C42, C43, C49, C50	Y
9-3-51	2203-002041	C-CDRAMIC.CHIP	0.47nF,10%,50V,1608	1	C5	Y
9-3-52	2203-005194	C-CERAMIC.CHIP	220pF,10%,50V,1608	1	C53	Y
9-3-53	2203-005249	C-CERAMIC,CHIP	100nF,10%,50V,1608	30	C1, C2, C3, C4, C6, C7, C10, C13, C14, C15, C16, C17, C18, C29, C31, C32, C33, C34, C35, C36, C37, C38, C39, C44, C45, C46, C47, C52, C56, C57	Y
9-3-54	2401-000056	C-AL	470uF,20%,35V,GP	1	C51	Y
9-3-55	2401-000324	C-AL	100uF,20%,35V,GP	1	C54	Y
9-3-56	2401-003775	C-AL	470uF,20%,16V,WT	1	C55	Y
9-3-57	2702-001119	INDUCTOR-RADIAL	220uH,15%,13X18MM	1	L6	Y
9-3-58	2801-004219	CRYSTAL-SMD	10MHZ,30PPM,28-AA	1	Y1	Y
9-3-59	3301-000317	CORE-FERRITE BEAD	CIM21J121, 2012	6	L1, L2, L3, L4, L5, L7	Y
9-3-60	3407-000177	SWITCH-DIP	5V,10mA,SLIDE,SPST	2	SW1, SW2	Y
9-3-61	3601-001180	FUSE-SURFACE MOUNT	125V,3.5A,FAST-ACTIN	1	FU1	Y
9-3-62	3702-001171	CONNECTOR-RIBBON	40P,FEMALE,RIGHTANGL	1	J6	Y
9-3-63	3708-001058	CONNECTOR-FPC/FFC/PIC	30P,1MM,STRAIGHT,S,	1	J10	Y
9-3-64	3708-001708	CONNECTOR-FPC/FFC/PIC	16P,1MM,STRAIGHT,S	1	J15	Y
9-3-65	3711-000820	CONNECTOR-HEADER	BOX,2P,1R,2.5MM,STRA	1	J11	Y
9-3-66	K602-00069A	CONNECTOR-HEADER	BOX,6P,1R,2MM,STRAI	1	J2	Y
9-3-67	3722-000550	JACK-MODULAR	6P,9.86MM,AU50U,GRY	1	J1	Y
9-3-68	3722-001035	JACK-DC POWER	3P,6.3mm,ANGLE	1	J12	Y
9-3-69	K204-00012A	BUZZER	85dB, 5V, MAX30mA,	1	LS1	Y

*** Type of SRP-275C (SRP-275MBC)**

No.	Code no.	Description	Specification	Q'ty	Location	Serviceable
9-3	AP02-00063C	SRP-275MBCS	ASS'Y (C TYPE,STD)	1		Y
	AP02-00063F	SRP-275MBCG	ASS'Y (C TYPE,GB2312)	1		Y
	AP02-00063G	SRP-275MBCB	ASS'Y (C TYPE,BIG5)	1		Y
9-3-1	K302-00011A	PCB-MAIN	4-LAYER, FR-4,T1.6	1		N
9-3-2	0903-001282	IC-MICROCONTROLLER	S3C4640, 32BIT,QFP,160P	1	U1	Y
9-3-3	0506-001019	IC-TR-ARRAY	STA471A,NPN,4,4W	3	U5, U7, U9	Y
9-3-4	0801-000718	IC (3 STATE OUT NONINVERT)	74HC574,SOIC20	4	U2, U3, U6, U8	Y
9-3-5	1003-001102	IC-MOTOR DRIVER	TEA3718DP,DIP,16P	2	U15, U17	Y
9-3-6	1003-001470	IC-MOTOR DRIVER	BA6920FP-Y,SOIC,25P,	1	U16	Y
9-3-7	1103-001096	IC-EEPROM	24LC04B, SOIC8	1	U14	Y
9-3-8	1105-001394	IC-DRAM	K4F151611D-JL60, SOJ42,	1	U13	Y
9-3-9	1107-001121	IC-FLASH MEMORY	M29F800DB,TSOP48	1	U12	Y
9-3-10	1202-000188	IC-VOLTAGE COMP.	10393,SOP,8P,244MIL,	1	U4	Y
9-3-11	1203-000404	IC-INVERTING SWITCH REGULATOR	MC34063A,SOP,8P,150M	1	U18	Y
9-3-12	1203-002523	IC-VOL. DETECTOR	KIA7045,SOT-89,4P,98MIL	1	U11	Y
9-3-13	4701-001037	IC-FREQ-ATTENUATOR	FS784,SOIC,8P,6to82MHz	1	U10	Y
9-3-14	K502-00033A	IC (2INPUT AND GATE)	NC7S08P5X,5PIN, SC70	1	U19	Y
9-3-15	K702-00023A	DIODE-ARRAY	UMP1N	4	DR1, DR2, DR3, DR4	Y
9-3-16	0401-001110	DIODE-SWITCHING	1SS400,80V,300MA	3	D20, D21, D22	Y
9-3-17	0402-000309	DIODE-RECTIFIER	1SR154-400,400V,1A,S	3	D17, D18, D19	Y
9-3-18	0402-001389	DIODE-RECTIFIER	RB050L-40,40V,3A,SOD	3	D23, D27, D28	Y
9-3-19	0406-000129	DIODE-TVS	P6KE6.8A,6.45/6.8/7.	1	ZD2	Y
9-3-20	0406-001158	DIODE-TVS	P6KE30A,28.50-31.50V	1	ZD1	Y
9-3-21	0501-000457	TR-SMALL SIGNAL	MMBT2222ALT1,NPN	4	Q2, Q3, Q4, Q5	Y
9-3-22	0503-001037	TR-DARLINGTON	2SD2170,NPN,2W,SC-62	1	Q1	Y
9-3-23	2011-000005	R-ARRAY	220ohm, 5%, 1/16W, 8PIN	2	RA1, RA2	Y
9-3-24	K802-00034A	R-ARRAY	100ohm, 5%, 1/16W, 8PIN	9	RA3, RA4, RA5, RA6, RA7, RA8, RA9, RA10, RA11	Y
9-3-25	K802-00039A	R-ARRAY	330ohm, 5%, 1/16W, 8PIN	2	RA12, RA13	Y
9-3-26	2001-000015	R-CARBON(S)	0.5ohm.5%.1/2W.AA.TP	2	R60, R67	Y
9-3-27	K802-00066A	R-CARBON(S)	0.47ohm,5%,1/2W,AA,T	1	R68	Y
9-3-28	2005-000419	R-WIRE WOUND	0.33ohm,1%,1W,AA,TP	1	R76	Y
9-3-29	2007-000052	R-CHIP	10Kohm,1%,1/16W,1608	1	R64	Y
9-3-30	2007-000070	R-CHIP	0ohm,5%,1608 TP	3	R23, R53, R54	Y
9-3-31	2007-000074	R-CHIP	100ohm,5%,1/16W,1608	6	R44, R45, R46, R47, R48, R49	Y
9-3-32	2007-000078	R-CHIP	1Kohm,5%,1/16W,1608	7	R9, R14, R16, R18, R51, R58, R65	Y
9-3-33	2007-000082	R-CHIP	3.3Kohm.5%,1/16W,1608	1	R43	Y
9-3-34	2007-000084	R-CHIP	4.7Kohm,5%,1/16W,1608	10	R1, R2, R3, R4, R15, R17, R20, R21, R22, R71	Y
9-3-35	2007-000090	R-CHIP	10Kohm.5%,1/16W,1608	10	R11, R36, R37, R38, R39, R41, R50, R52, R55, R56	Y
9-3-36	2007-000092	R-CHIP	15Kohm,5%,1/16W,1608	4	R5, R6, R7, R8	Y
9-3-37	2007-000094	R-CHIP	22Kohm,5%,1/16W,1608	2	R78, R79	Y
9-3-38	2007-000098	R-CHIP	56Kohm,5%,1/16W,1608	2	R59, R66	Y
9-3-39	2007-000539	R-CHIP	200ohm,5%,1/16W,1608	2	R40, R42	Y
9-3-40	2007-000704	R-CHIP	3.6Kohm,5%,1/16W,1608	3	R27, R29, R33	Y
9-3-41	2007-000803	R-CHIP	36Kohm,1%,1/16W,1608	1	R69	Y
9-3-42	2007-000965	R-CHIP	5.1Kohm,5%,1/16W,1608	6	R10, R12, R26, R28, R32, R57	Y
9-3-43	2007-001433	R-CHIP	12Kohm,1%,1/16W,1608	1	R70	Y
9-3-44	2007-007440	R-CHIP	510ohm,1%,1/16W,1608	1	R61	Y
9-3-45	K802-00038F	R-CHIP	1.5Kohm, 1%, 1/16W,1608	1	R13	Y
9-3-46	K804-00009A	R-CHIP	220ohm,5%,1/16W,1608	1	R19	Y
9-3-47	K804-00027A	R-CHIP	330ohm, 5%, 1/16W,1608	1	R77	Y

No.	Code no.	Description	Specification	Q'ty	Location	Serviceable
9-3-48	2203-000236	C-CERAMIC,CHIP	0.1nF,5%,50V,C0G,1608	25	C30, C58, C59, C60, C61, C62, C63, C64, C65, C66, C67, C68, C69, C70, C71, C72, C73, C74, C75, C76, C77, C78, C79, C80, C81	Y
9-3-49	2203-000476	C-CDRAMIC.CHIP	1000nF,+80-20%,2012	1	C20	Y
9-3-50	2203-000626	C-CERAMIC,CHIP	0.022NF.5%.50V.1608	12	C12, C19, C21, C23, C24, C25, C26, C27, C28, C40, C41, C48	Y
9-3-51	2203-001222	C-CERAMIC.CHIP	820pF,10%,50V,1608	5	C22, C42, C43, C49, C50	Y
9-3-52	2203-002041	C-CDRAMIC.CHIP	0.47nF,10%,50V,1608	1	C5	Y
9-3-53	2203-005194	C-CERAMIC.CHIP	220pF,10%,50V,1608	1	C53	Y
9-3-54	2203-005249	C-CERAMIC,CHIP	100nF,10%,50V,1608	30	C1, C2, C3, C4, C6, C7, C10, C13, C14, C15, C16, C17, C18, C29, C31, C32, C33, C34, C35, C36, C37, C38, C39, C44, C45, C46, C47, C52, C56, C57	Y
9-3-55	2401-000056	C-AL	470uF,20%,35V,GP	1	C51	Y
9-3-56	2401-000324	C-AL	100uF,20%,35V,GP	1	C54	Y
9-3-57	2401-003775	C-AL	470uF,20%,16V,WT	1	C55	Y
9-3-58	2702-001119	INDUCTOR-RADIAL	220uH,15%,13X18MM	1	L6	Y
9-3-59	2801-004219	CRYSTAL-SMD	10MHZ,30PPM,28-AA	1	Y1	Y
9-3-60	3301-000317	CORE-FERRITE BEAD	CIM21J121, 2012	6	L1, L2, L3, L4, L5, L7	Y
9-3-61	3407-000177	SWITCH-DIP	5V,10mA,SLIDE,SPST	2	SW1, SW2	Y
9-3-62	3601-001180	FUSE-SURFACE MOUNT	125V,3.5A,FAST-ACTIN	1	FU1	Y
9-3-63	3702-001171	CONNECTOR-RIBBON	40P,FEMALE,RIGHTANGL	1	J6	Y
9-3-64	3708-001058	CONNECTOR-FPC/FFC/PIC	30P,1MM,STRAIGHT,S,	1	J10	Y
9-3-65	3708-001708	CONNECTOR-FPC/FFC/PIC	16P,1MM,STRAIGHT,S	1	J15	Y
9-3-66	3711-000820	CONNECTOR-HEADER	BOX,2P,1R,2.5MM,STRA	1	J11	Y
9-3-67	K602-00069A	CONNECTOR-HEADER	BOX,6P,1R,2MM,STRAI	1	J2	Y
9-3-68	3722-000550	JACK-MODULAR	6P,9.86MM,AU50U,GRY	1	J1	Y
9-3-69	3722-001035	JACK-DC POWER	3P,6.3mm,ANGLE	1	J12	Y
9-3-70	K204-00012A	BUZZER	85dB, 5V, MAX30mA,	1	LS1	Y

4-4-2 ASSY-PCB-CONNECTOR SUB

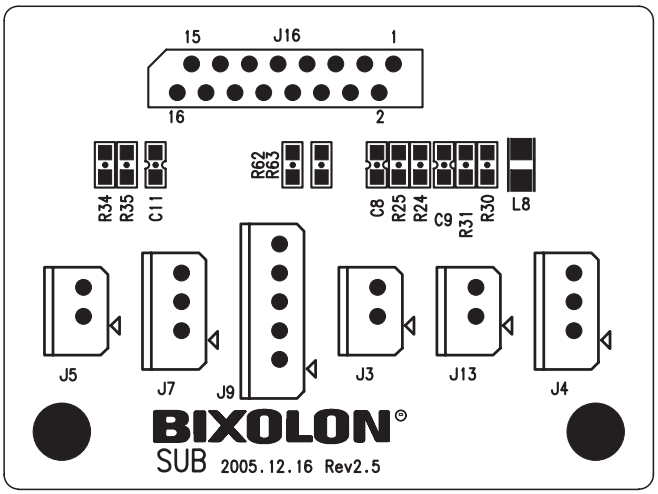

*** Type of SRP-275A**

No.	Code No.	Description	Specification	Q'ty	Location	Serviceable
3-7	**AP02-00062A**	**PCB-CONNECTOR SUB-A ASS'Y**	**ASS'Y (A TYPE)**	**1**		**Y**
3-7-1	K302-00019A	PCB-CONNECTOR SUB	4-LAYER, FR-4,T1.6	1		**N**
3-7-2	2007-000090	R-CHIP	10Kohm.5%,1/16W,1608	1	R62	**Y**
3-7-3	2007-000539	R-CHIP	200ohm,5%,1/16W,1608	1	R63	**Y**
3-7-4	2007-000078	R-CHIP	1Kohm,5%,1/16W,1608	2	R25, R35	**Y**
3-7-5	2007-000084	R-CHIP	4.7Kohm,5%,1/16W,1608	3	R24, R30, R34	**Y**
3-7-6	2007-000082	R-CHIP	3.3Kohm.5%,1/16W,1608	1	R31	**Y**
3-7-7	2203-005249	C-CERAMIC,CHIP	100nF,10%,50V,1608	3	C8, C9, C11	**Y**
3-7-8	3301-000317	CORE-FERRITE BEAD	CIM21J121, 2012	1	L8	**Y**
3-7-9	3711-000827	CONNECTOR-HEADER	BOX,2P,1R,2mm,STRAIG	3	J3, J5, J13	**Y**
3-7-10	3711-000907	CONNECTOR-HEADER	BOX,3P,1R,2mm,STRAIG	2	J4, J7	**Y**
3-7-11	3708-001708	CONNECTOR-FPC/FFC/PIC	16P,1MM,STRAIGHT,S	1	J16	**Y**

*** Type of SRP-275C**

No.	Code No.	Description	Specification	Q'ty	Location	Serviceable
3-7	**AP02-00062C**	**PCB-CONNECTOR SUB-C ASS'Y**	**ASS'Y (C TYPE)**	**1**		**Y**
3-7-1	K302-00019A	PCB-CONNECTOR SUB	4-LAYER, FR-4,T1.6	1		**N**
3-7-2	2007-000090	R-CHIP	10Kohm.5%,1/16W,1608	1	R62	**Y**
3-7-3	2007-000539	R-CHIP	200ohm,5%,1/16W,1608	1	R63	**Y**
3-7-4	2007-000078	R-CHIP	1Kohm,5%,1/16W,1608	2	R25, R35	**Y**
3-7-5	2007-000084	R-CHIP	4.7Kohm,5%,1/16W,1608	3	R24, R30, R34	**Y**
3-7-6	2007-000082	R-CHIP	3.3Kohm.5%,1/16W,1608	1	R31	**Y**
3-7-7	2203-005249	C-CERAMIC,CHIP	100nF,10%,50V,1608	3	C8, C9, C11	**Y**
3-7-8	3301-000317	CORE-FERRITE BEAD	CIM21J121, 2012	1	L8	**Y**
3-7-9	3711-000827	CONNECTOR-HEADER	BOX,2P,1R,2mm,STRAIG	3	J3, J5, J13	**Y**
3-7-10	3711-000907	CONNECTOR-HEADER	BOX,3P,1R,2mm,STRAIG	2	J4, J7	**Y**
3-7-11	3711-001018	CONNECTOR-HEADER	BOX,5P,1R,2MM,STRAI	1	J9	**Y**
3-7-12	3708-001708	CONNECTOR-FPC/FFC/PIC	16P,1MM,STRAIGHT,S	1	J16	**Y**

4-4-3 ASSY-OPERATION PANEL

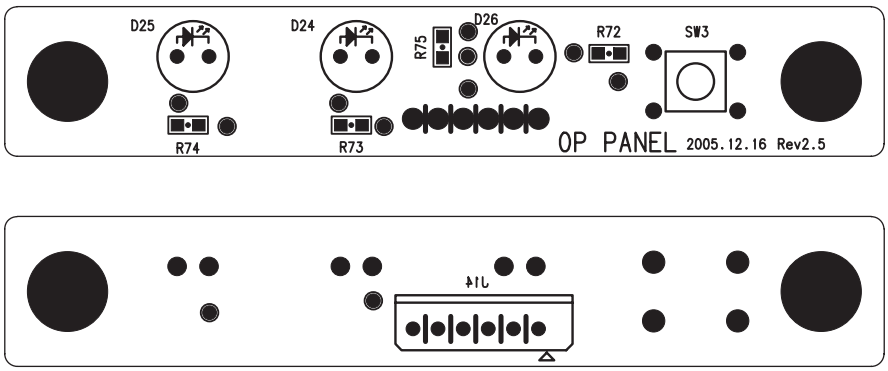

No.	Code No.	Description	Specification	Q'ty	Location	Serviceable
7-6	**AZ02-00024A**	**ASSY-OPERATION PANEL**	**ASS'Y**	**1**		**Y**
7-6-1	K302-00013A	PCB-OPERATION PANEL	4-LAYER,FR-4,1.6T	1		**N**
7-6-2	0601-001374	DIODE-LED	RED, 3pi, DIP	2	D24, D25	**Y**
7-6-3	0601-001376	DIODE-LED	GREED, 3pi, DIP	1	D26	**Y**
7-6-4	2007-000539	R-CHIP	200ohm,5%,1/16W,1608	3	R73, R74, R75	**Y**
7-6-5	2007-000094	R-CHIP	22Kohm,5%,1/16W,1608	1	R72	**Y**
7-6-6	3404-001205	SWITCH-TACT	12VDC,50MA,260GF,6.0	1	SW3	**Y**
7-6-7	K602-00069A	CONNECTOR-HEADER	BOX,6P,1R,2MM,STRAI	1	J14	**Y**

4-4-4 ASSY-PCB-HEAD

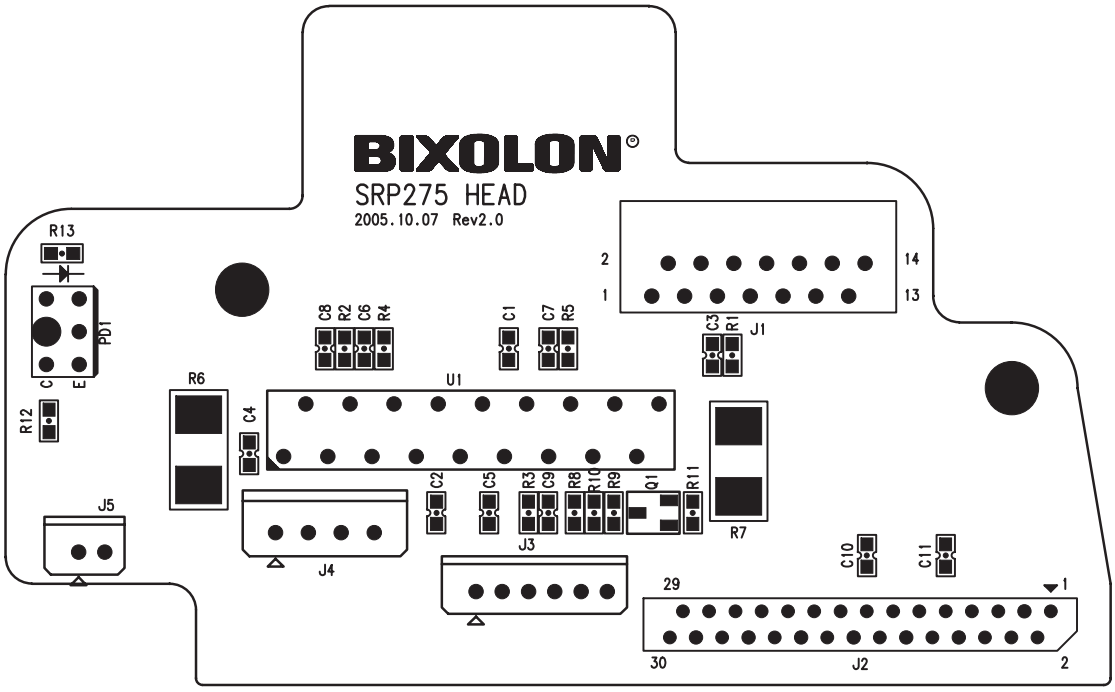

No.	Code No.	Description	Specification	Q'ty	Location	Serviceable
1-18	**AP03-00060A**	**ASSY-PCB-HEAD**	**ASS'Y**	**1**		**Y**
1-18-1	K302-00012A	PCB-HEAD	4-LAYER, FR-4,T1.6	1		**N**
1-18-2	1003-001049	IC-MOTOR DRIVER	SLA7024M,DIP,18P,31M	1	U1	**Y**
1-18-3	0604-001237	PHOTO INTERRUPTER	RPI352C	1	PD1	**Y**
1-18-4	0501-000457	TR-SMALL SIGNAL	MMBT2222ALT1,NPN,	1	Q1	**Y**
1-18-5	2007-007961	R-CHIP	1ohm,1%,1W,DA,TP,6432	2	R6, R7	**Y**
1-18-6	2007-000078	R-CHIP	1Kohm,5%,1/16W,1608	2	R1, R11	**Y**
1-18-7	2007-007440	R-CHIP	510ohm,1%,1/16W,1608	2	R4, R5	**Y**
1-18-8	K802-00044F	R-CHIP	680ohm, 1%, 1/16W.1608	1	R8	**Y**
1-18-9	2007-000097	R-CHIP	47Kohm,5%,1/16W,1608	2	R2, R3	**Y**
1-18-10	2007-000090	R-CHIP	10Kohm.5%,1/16W,1608	1	R12	**Y**
1-18-11	2007-000539	R-CHIP	200ohm,5%,1/16W,1608	1	R13	**Y**
1-18-12	2007-000659	R-CHIP	27ohm,1%,1/16W,1608	1	R9	**Y**
1-18-13	K802-00045F	R-CHIP	100ohm,1%,1/16W,1608	1	R10	**Y**
1-18-14	2203-005249	C-CERAMIC,CHIP	100nF,10%,50V,1608	5	C1, C2, C3, C10, C11	**Y**
1-18-15	2203-000626	C-CERAMIC.CHIP	0.022NF.5%.50V.1608	2	C4, C5	**Y**
1-18-16	2203-000440	C-CDRAMIC.CHIP	1nF.10%,50V.1608	2	C6, C7	**Y**
1-18-17	2203-002041	C-CERAMIC,CHIP	0.47nF,10%,50V,1608	2	C8, C9	**Y**
1-18-18	3711-000827	CONNECTOR-HEADER	BOX,2P,1R,2mm	1	J5	**Y**
1-18-19	K602-00070A	CONNECTOR-HEADER	BOX,4P,1R,2.5mm,R/A	1	J4	**Y**
1-18-20	3711-001061	CONNECTOR-HEADER	BOX,6P,1R,2mm,R/A	1	J3	**Y**
1-18-21	3708-001058	CONNECTOR-FPC/FFC/PIC	30P,1MM,STRAIGHT,S	1	J2	**Y**
1-18-22	3708-000155	CONNECTOR-FPC/FFC/PIC	14P,1MM,R/A,S	1	J1	**Y**

4-4-5 Serial Interface (RS-232C)

* IFC-S TYPE

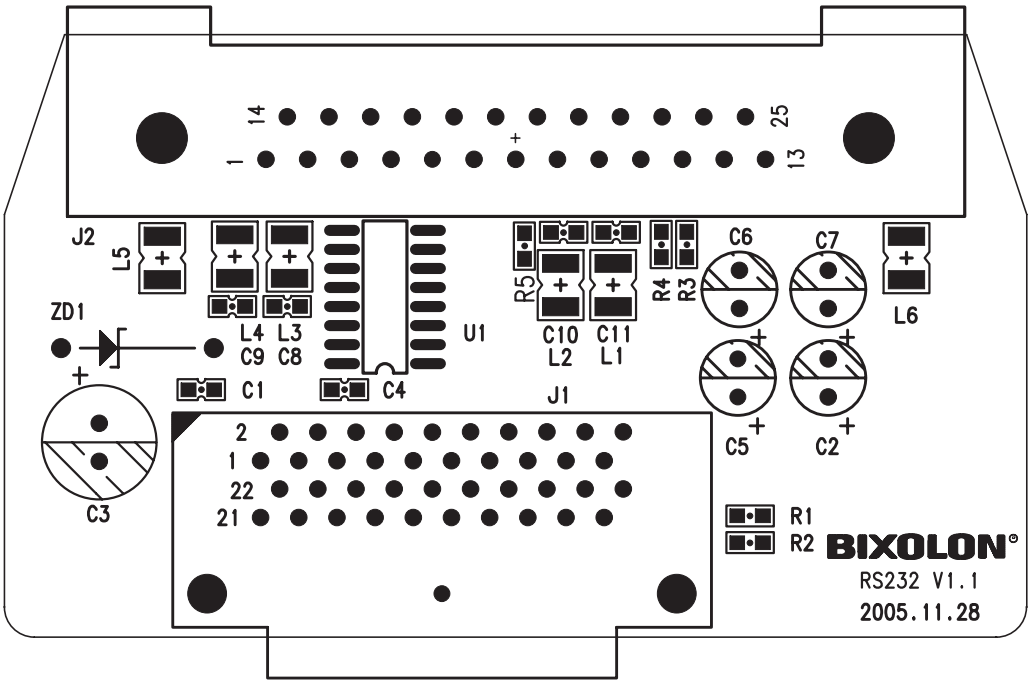

No.	Code No	Description	Specification	Q'ty	Location	Serviceable
14-2	**JE94-08001A**	**ASSY-PCB-IFC-S TYPE**	**ASS'Y**	**1**		**Y**
14-2-1	JE41-00082N	PCB-IFC-S TYPE	FR4,4LAYER,T1.6MM	1		**N**
14-2-2	0406-000129	DIODE-TVS	P6KE6.8A,6.45/6.8/7.	1	ZD1	**Y**
14-2-3	1006-001262	IC-DRIVER/RECEIVER	ST232,SO-16,16P,150M	1	U1	**Y**
14-2-4	2007-000070	R-CHIP	0ohm,5%,1608 TP	2	R3, R4	**Y**
14-2-5	2007-000090	R-CHIP	10KOHM.5%,1/16W,DA,T	2	R1, R2	**Y**
14-2-6	2203-002041	C-CERAMIC,CHIP	0.47nF,10%,50V,X7R,T	4	C8, C9, C10, C11	**Y**
14-2-7	2203-005249	C-CERAMIC,CHIP	100nF,10%,50V,X7R,TP	2	C1, C4	**Y**
14-2-8	2401-000205	C-AL	100uF.20%,16V,GP,TP	1	C3	**Y**
14-2-9	2401-001801	C-AL	100nF,20%,50V,GP,TP,	4	C2, C5, C6, C7	**Y**
14-2-10	3301-000325	CORE-FERRITE BEAD	AB,3.2x2.5x1.3mm	6	L1, L2, L3, L4, L5, L6	**Y**
14-2-11	3701-001272	CONNECTOR-DSUB	25P,2R,FEMALE.ANGLE.	1	J1	**Y**
14-2-12	3702-001172	CONNECTOR-RIBBON	40P,MALE,RIGHTANGLE,	1	J2	**Y**

4-4-6 Parallel Interface (IEEE1284)

* IFC-P TYPE

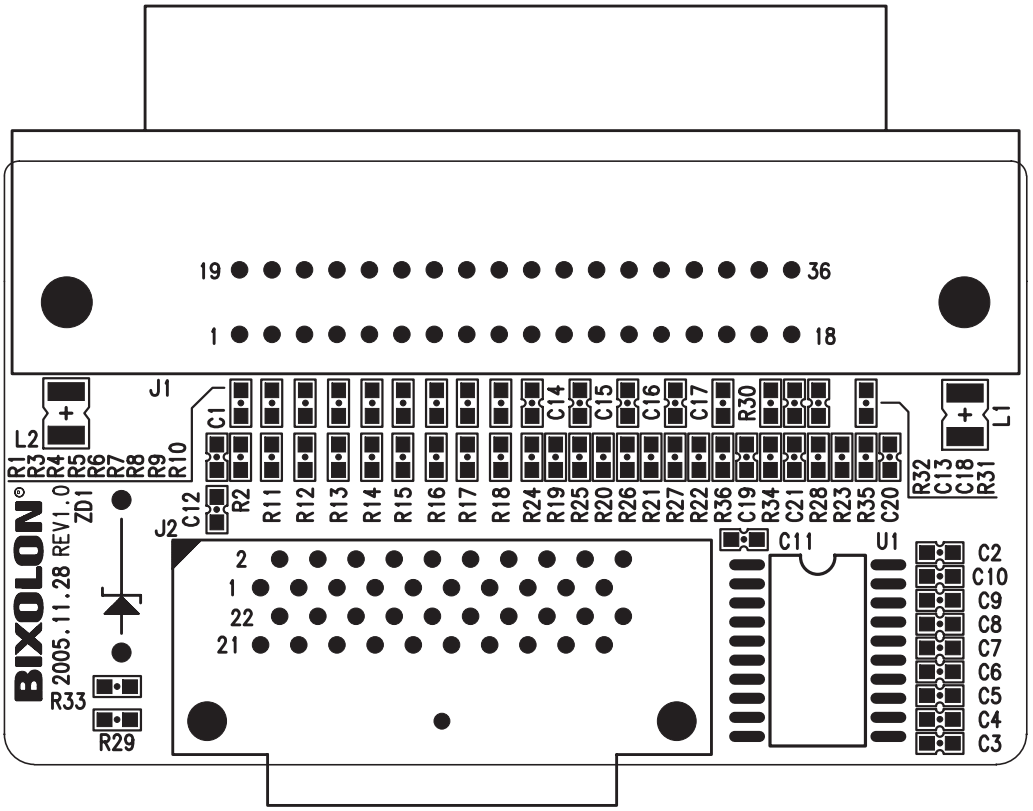

No.	Code No.	Description	Specification	Q'ty	Location	Serviceable
14-2	**JE94-06001A**	**PCB-IFC-P TYPE ASS'Y**	**ASS'Y**	**1**		**Y**
14-2-1	JE41-00082M	PCB-IFC-P TYPE	FR4,4LAYER,T1.6MM	1		**N**
14-2-2	0801-000928	IC	74HCT245	1	U1	**Y**
14-2-3	0406-000129	DIODE-TVS	P6KE6.8A,6.45/6.8/7.	1	ZD1	**Y**
14-2-4	2007-000078	R-CHIP	1Kohm,5%,1/16W,1608	9	R1, R3, R4, R5, R6, R7, R8, R9, R10	**Y**
14-2-5	2007-000116	R-CHIP	120ohm.5%,1/16W,1608	1	R2	**Y**
14-2-6	2007-000539	R-CHIP	200ohm,5%,1/16W,1608	3	R34, R35, R36	**Y**
14-2-7	2007-000965	R-CHIP	5.1Kohm,5%,1/16W,1608	10	R19, R20, R21, R22, R23, R29, R30, R31, R32, R33	**Y**
14-2-8	2007-000839	R-CHIP	39ohm,5%,1/16W.1608	13	R11, R12, R13, R14, R15, R16, R17, R18, R24, R25, R26, R27, R28	**Y**
14-2-9	2203-000236	C-CERAMIC,CHIP	0.1nF,5%,50V,C0G,1608	3	C19, C20, C21	**Y**
14-2-10	2203-000440	C-CERAMIC.CHIP	1nF.10%,50V.X7R.1608	9	C3, C4, C5, C6, C7, C8, C9, C10, C12	**Y**
14-2-11	2203-000626	C-CERAMIC.CHIP	0.022NF.5%.50V.1608	5	C14, C15, C16, C17, C18	**Y**
14-2-12	2203-005194	C-CERAMIC.CHIP	220pF,10%,50V,1608	1	C1	**Y**
14-2-13	2203-005249	C-CERAMIC,CHIP	100nF,10%,50V,1608	3	C2, C12, C13	**Y**
14-2-14	3301-000325	CORE-FERRITE BEAD	CIB32P600, AB, 3525	2	L1, L2	**Y**
14-2-15	3702-000118	CONNECTOR-RIBBON	36P,FEMALE,ANGLE,AUF	1	J1	**Y**
14-2-16	3702-001172	CONNECTOR-RIBBON	40P,MALE,RIGHTANGLE,	1	J2	**Y**

4-4-7 USB Interface

* IFC-U TYPE

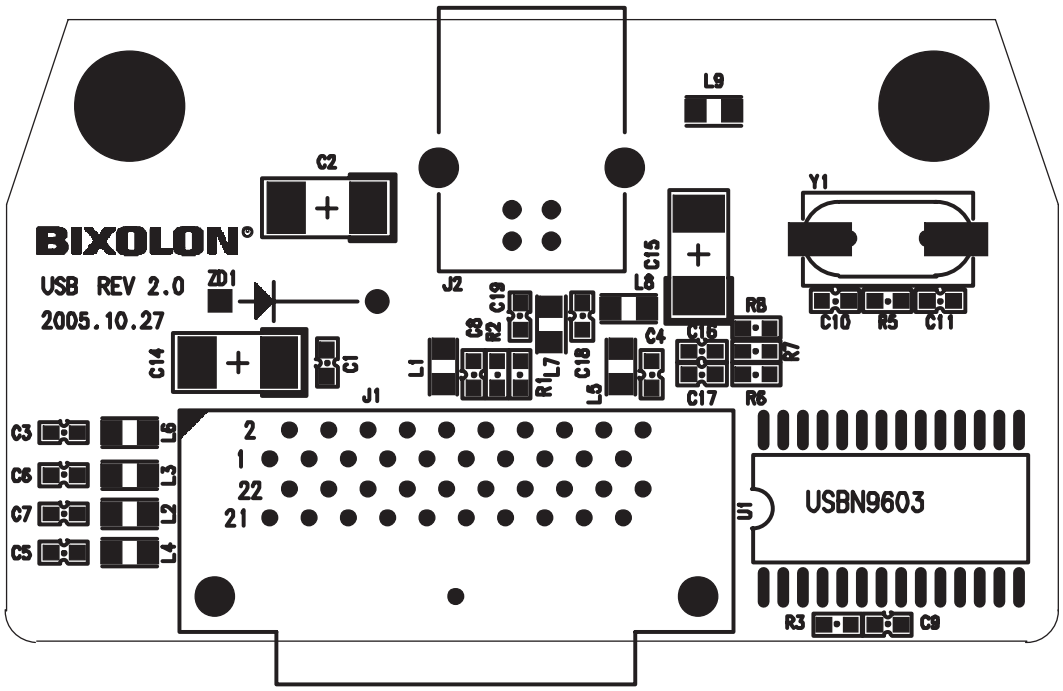

No.	Code No.	Description	Specification	Q'ty	Location	Serviceable
14-2	**JE94-07001A**	**PCB-IFC-U TYPE ASS'Y**	**ASS'Y**	**1**		**Y**
14-2-1	JE41-00486B	PCB-IFC-U TYPE	FR4,4LAYER,T1.6MM	1		**N**
14-2-2	K504-00035A	IC-USB CONTROL	USBN9603-28M,8BIT,SOP, 28P, 300MIL,48MHz,3.3V	1	U1	**Y**
14-2-3	2007-000090	R-CHIP	10Kohm.5%,1/16W,DA,T	3	R1, R2, R3	**Y**
14-2-4	2007-000239	R-CHIP	1.5Kohm,1%,1/16W,1608	1	R8	**Y**
14-2-5	2007-000659	R-CHIP	27ohm,1%,1/16W,1608	2	R6, R7	**Y**
14-2-6	K804-00007A	R-CHIP	1Mohm, 5%, 1608	1	R5	**Y**
14-2-7	2203-000626	C-CERAMIC,CHIP	22pF,10%,50V,1608	9	C3, C4, C5, C6, C7, C10, C11, C16, C17	**Y**
14-2-8	2203-005194	C-CERAMIC.CHIP	220pF,10%,50V,X7R,TP	2	C18, C19	**Y**
14-2-9	2203-005249	C-CERAMIC,CHIP	100nF,10%,50V,1608	2	C1, C9	**Y**
14-2-10	K006-00007A	C-CERAMIC,CHIP	1000pF,10%,50V,1608	1	C8	**Y**
14-2-11	2404-000128	C-TANTAL,CHIP	10uF,16V,10%,1W,6032	1	C15	**Y**
14-2-12	2404-000190	C-TANTAL,CHIP	22uF,16V,10%,1W,6032	1	C2	**Y**
14-2-13	K006-00008A	C-TANTAL,CHIP	100uF,16V,10%,1W,6032	1	C14	**Y**
14-2-14	0406-000129	DIODE-TVS	P6KE6.8A,600W,DIP	1	ZD1	**Y**
14-2-15	3301-000317	FERRITE BEAD,CHIP	CIM21J121NES,2012	9	L1, L2, L3, L4, L5, L6, L7, L8, L9	**Y**
14-2-16	K204-00016A	CRYSTAL-SMD	SX-1,24MHz,20pF	1	Y1	**Y**
14-2-17	3702-001172	CONNECTOR-RIBBON	I/F_CON (40P,MALE,RIGHT NGLE,AU)	1	J1	**Y**
14-2-18	3722-001101	CONNECTOR	USB PORT_B TYPE	1	J2	**Y**

4-4-8 Ethernet Interface

* IFC-E TYPE

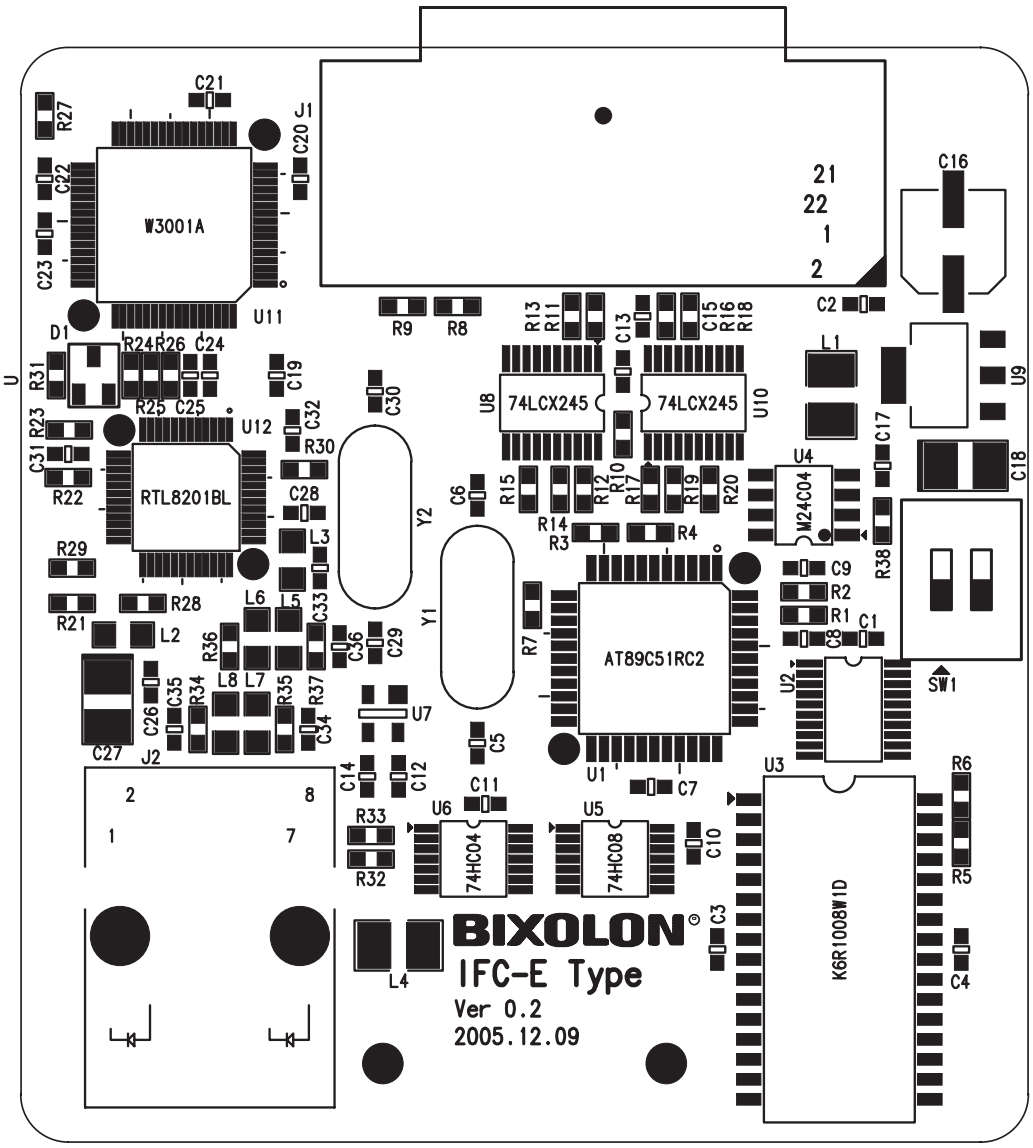

No.	Code No.	Description	Specification	Q'ty	Location	Serviceable
14-2	**AP06-00081A**	**PCB-IFC-E TYPE ASS'Y**	**ASS'Y**	**1**		**Y**
14-2-1	K302-00048A	PCB-IFC-E TYPE	2-LAYER, FR-4, 1.6T	1		**N**
14-2-2	K508-00043A	IC-MICROCONTROLLER	AT89C51RC2-RLTIM	1	U1	**Y**
14-2-3	K508-00042A	IC-SRAM	K6R1008V1D-UI10, TSOP2-32	1	U3	**Y**
14-2-4	K508-00046A	IC-RESET	ASM811SEUS_T, SOT143	1	U7	**Y**
14-2-5	K508-00045A	IC-REGULATOR	LM1117, SOT223	1	U9	**Y**
14-2-6	K508-00047A	IC-PHY	RTL8201BL, LQFP48	1	U12	**Y**
14-2-7	K508-00044A	IC-TCP/IP	W3100A, LQFP64	1	U11	**Y**
14-2-8	K508-00039A	IC-LOGIC	74HC04, TSSOP14	1	U6	**Y**
14-2-9	K508-00040A	IC-LOGIC	74HC08, TSSOP14	1	U5	**Y**
14-2-10	K508-00041A	IC-LOGIC	74HC573, TSSOP20	1	U2	**Y**
14-2-11	K504-00023A	IC-LOGIC	74LCX245, TSSOP20	2	U8, U10	**Y**
14-2-12	1103-001096	IC-EEPROM	M24C04W, SO8	1	U4	**Y**
14-2-13	K704-00017A	DIODE-SWITCHING	BAW56	1	D1	**Y**
14-2-14	K704-00021A		KDS181			
14-2-15	2007-000070	R-CHIP	0ohm, 5%, 1/16W, 50V, 1608	11	R10, R11, R12, R13, R14, R15, R16, R17, R18, R19, R20	**Y**
14-2-16	2007-000078	R-CHIP	1Kohm, 5%, 1/16W, 50V, 1608	1	R29	**Y**
14-2-17	2007-000084	R-CHIP	4.7Kohm, 5%, 1/16W, 50V, 1608	11	R1, R2, R3, R4, R22, R23, R24, R25, R26, R27, R31	**Y**
14-2-18	2007-000090	R-CHIP	10Kohm, 5%, 1/16W, 50V, 1608	5	R5, R6, R8, R9, R38	**Y**
14-2-19	2007-000239	R-CHIP	1.5Kohm, 5%, 1/16W, 50V, 1608	1	R21	**Y**
14-2-20	2007-000539	R-CHIP	200ohm, 5%, 1/16W, 50V, 1608	4	R7, R30, R32, R33	**Y**
14-2-21	K808-00060A	R-CHIP	51ohm, 5%, 1/16W, 50V, 1608	4	R34, R35, R36, R37	**Y**
14-2-22	K808-00061F	R-CHIP	5.9Kohm, 1%, 1/16W, 50V, 1608	1	R28	**Y**
14-2-23	2203-000626	C-CERAMIC, CHIP	22pF, 5~10%, 50V	4	C5, C6, C29, C30	**Y**
14-2-24	2203-005249	C-CERAMIC, CHIP	100nF, 5~10%, 50V	29	C1, C2, C3, C4, C7, C8, C9, C10, C11, C12, C13, C14, C15, C17, C19, C20, C21, C22, C23, C24, C25, C26, C28, C31, C32, C33, C34, C35, C36	**Y**
14-2-25	K008-00007A	C-TANTAL, CHIP	33uF, 10V, 3528	2	C18, C27	**Y**
14-2-26	2402-000168	C-AL, CMD	100uF, 16V, SMD	1	C16	**Y**
14-2-27	3301-000317	CORE-FERRITE BEAD	CIM21J121, 120ohm, 2012	2	L2, L3	**Y**
14-2-28	3301-000325	CORE-FERRITE BEAD	CIB32P600, 60ohm, 3525	2	L1, L4	**Y**
14-2-29	K902-00007A	CORE-FERRITE BEAD	CIM21U100, 100ohm, 2012	4	L5, L6, L7, L8	**Y**
14-2-30	K204-00014A	DIP-SWITCH	5V, 10mA, SLIDE, SPST	1	SW1	**Y**
14-2-31	3702-001172	CONNECTOR-RIBBON	I/F_CON(40P,MALE,RIGHT ANGLE,AU)	1	J1	**Y**
14-2-32	K608-00095A	CONNECTOR-ETHERNET	RJ-45, Tab Down LED	1	J2	**Y**
14-2-33	K208-00018A	CRYSTAL	22.1184MHz, DIP & SMD	1	Y1	**Y**
14-2-34	K208-00019A	CRYSTAL	25MHz, DIP, SMD	1	Y2	**Y**

4-5 Schematic Diagram

4-5-1 Main Circuit Diagram

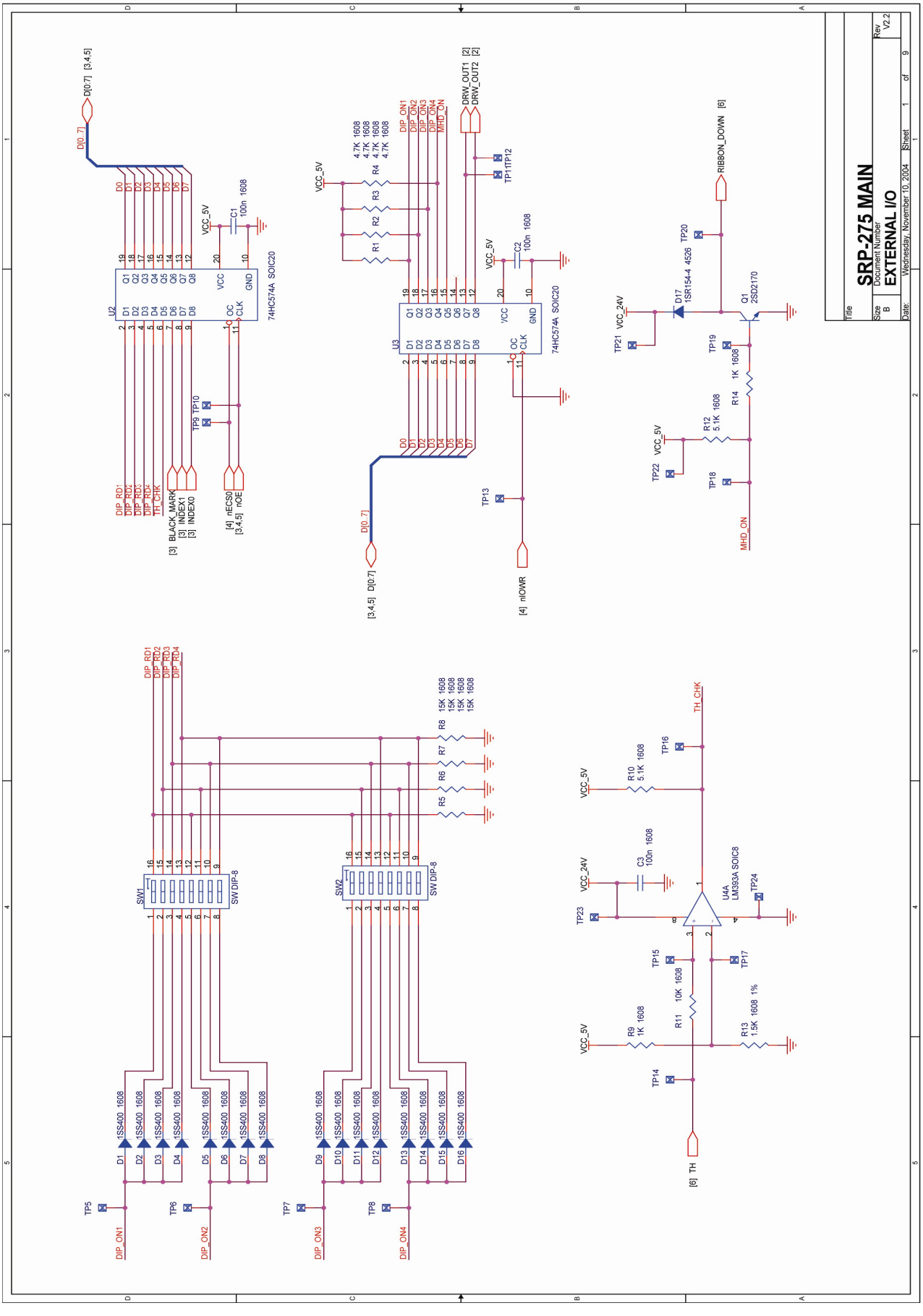

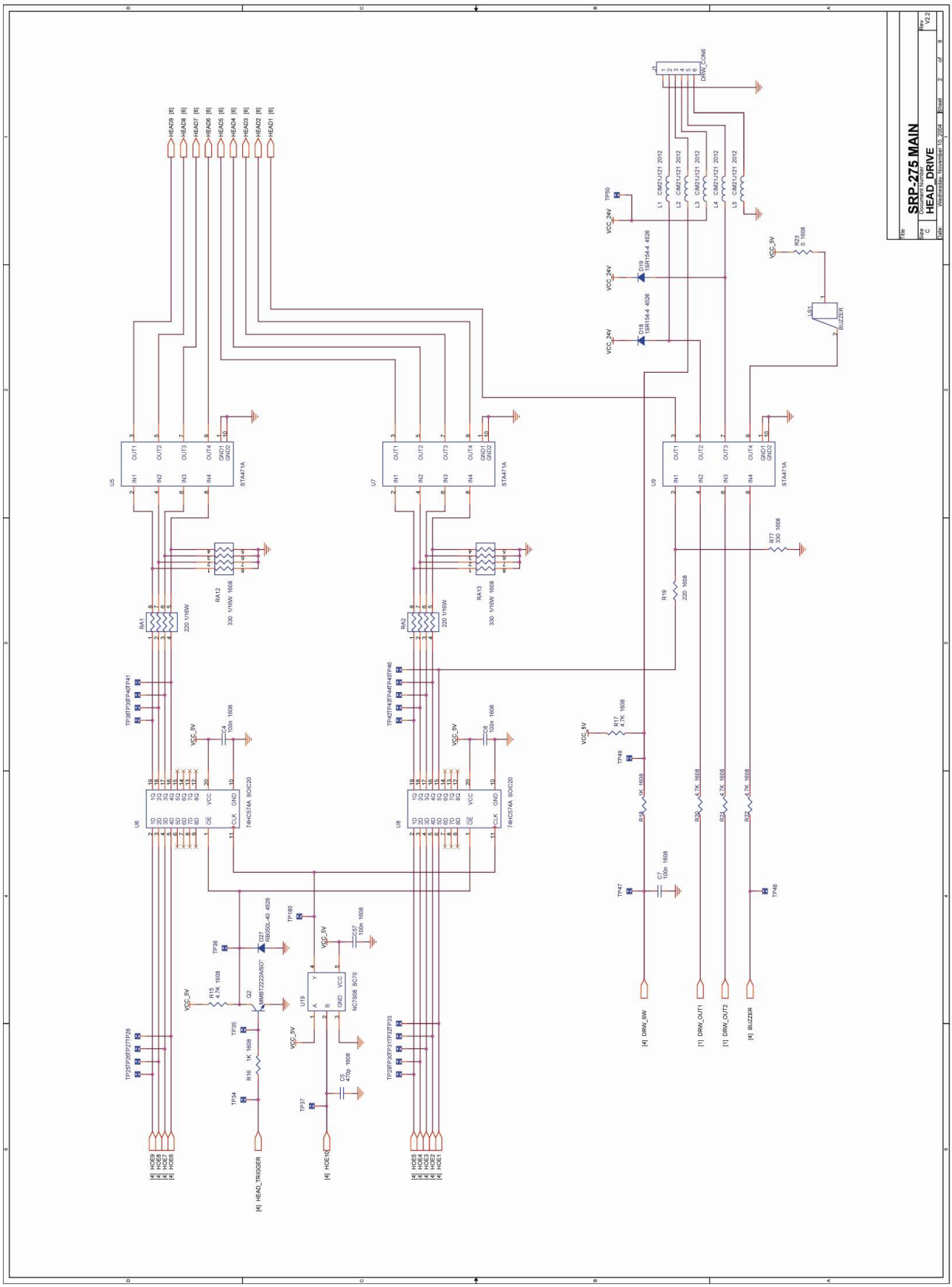
SRP-275 MAIN
HEAD_DRIVE
Wednesday, November 10, 2004
HEAD9 [6]
HEAD8 [6]
HEAD7 [6]
HEAD6 [6]
HEAD5 [6]
HEAD4 [6]
HEAD3 [6]
HEAD2 [6]
HEAD1 [6]
DRW_CON6
VCC_24V
VCC_5V
BUZZER
74HC574A SOIC20
NC7S08 SC70
[4] DRW_SW
[1] DRW_OUT1
[1] DRW_OUT2
[4] BUZZER
[4] HEAD_TRIGGER

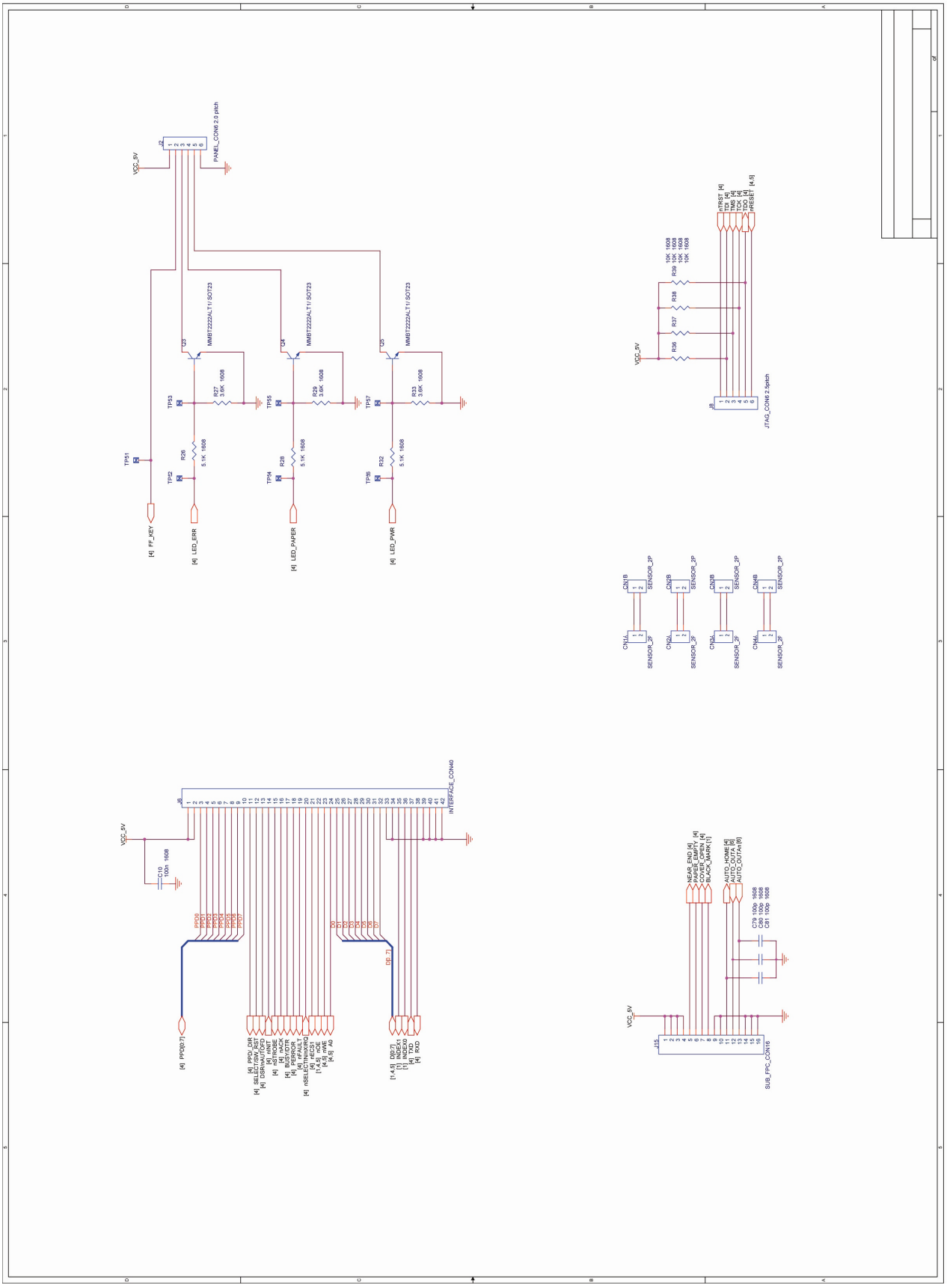

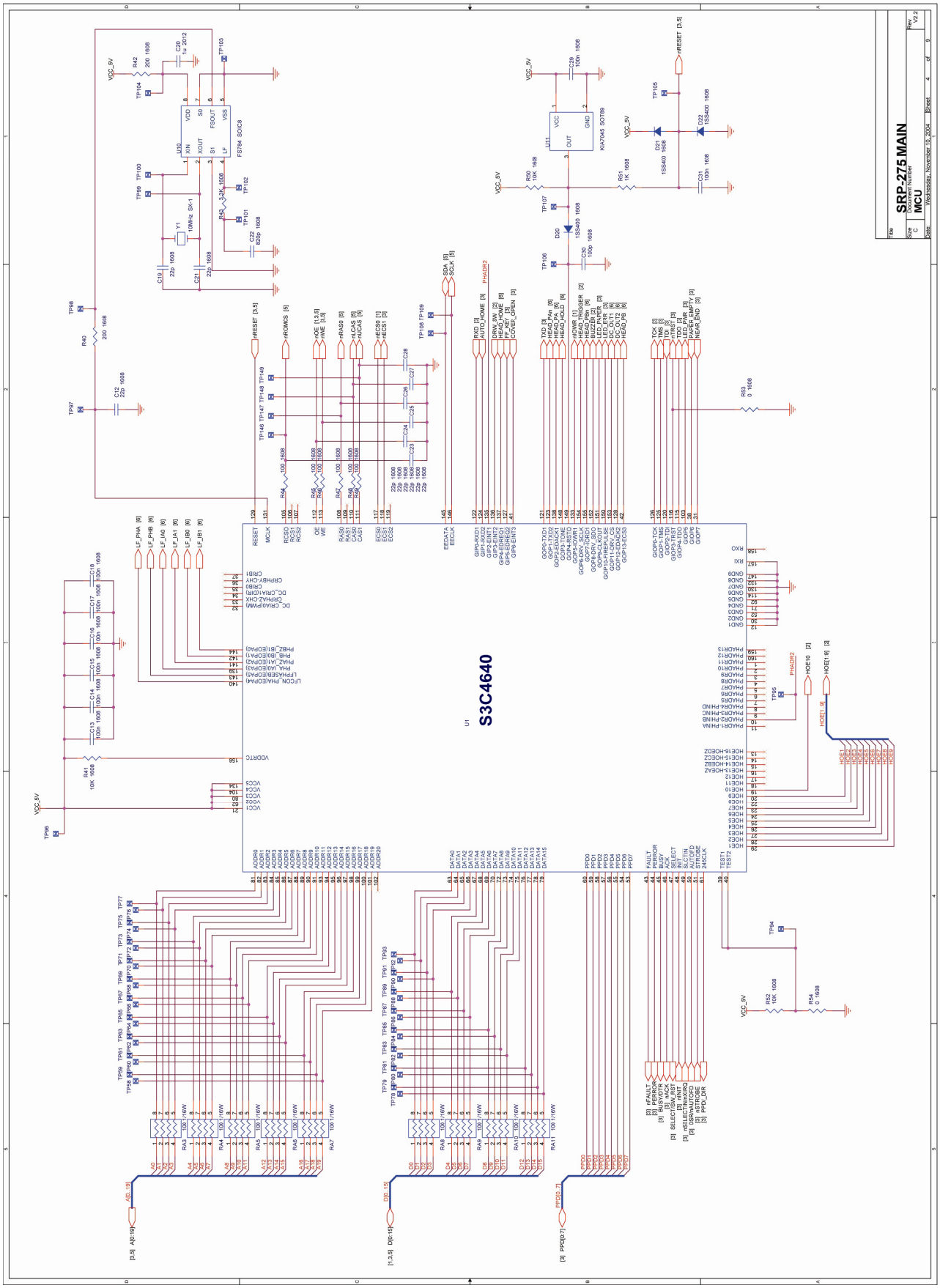
SRP-275 MAIN
MCU
S3C4640

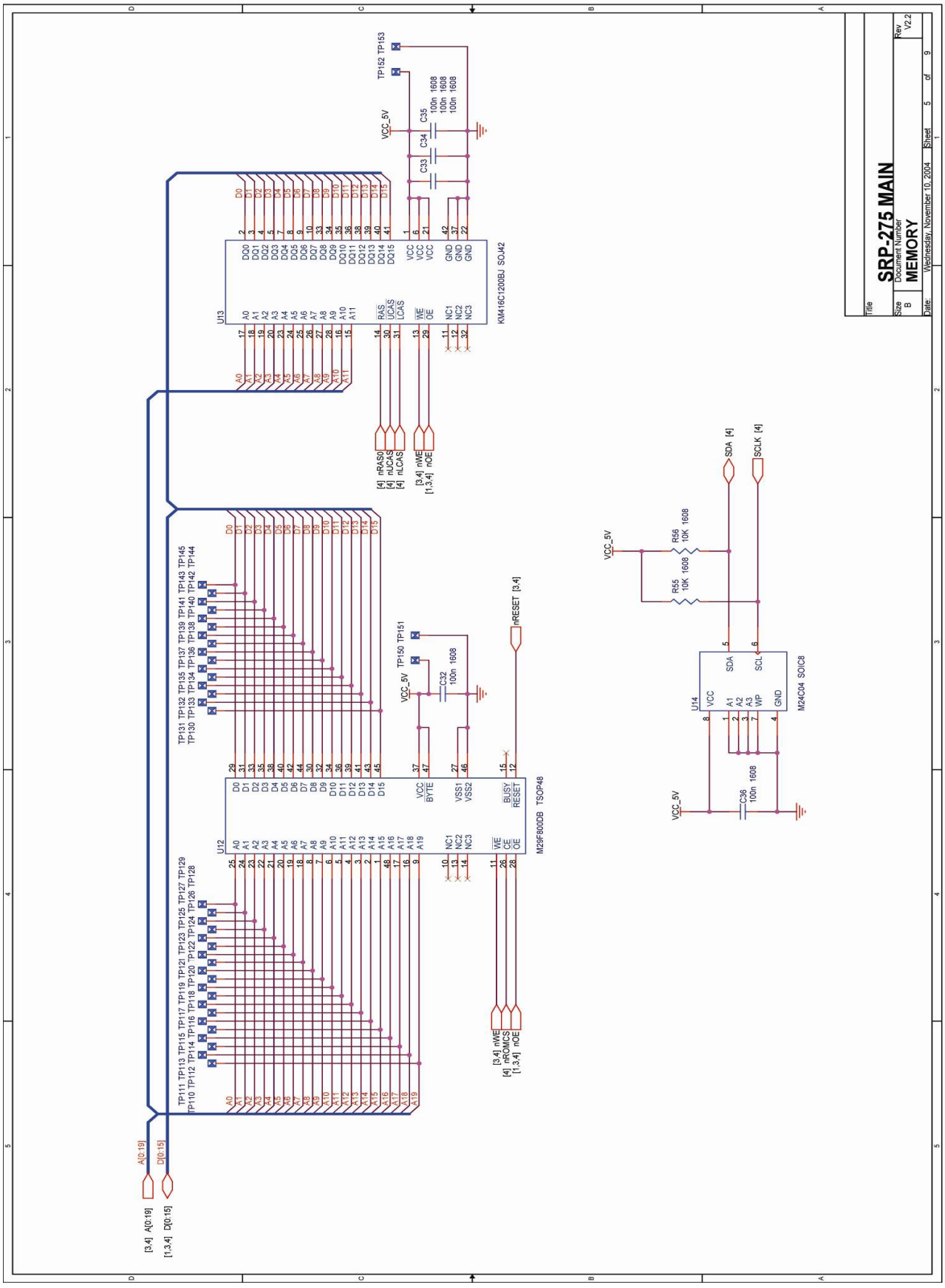
SRP-275 MAIN
MEMORY
Wednesday, November 10, 2004
U12
M29F800DB TSOP48
U13
K4M416C1200BJ SOJ42
U14
M24C04 SOIC8
VCC_5V
SDA [4]
SCLK [4]
A[0:19]
D[0:15]
[3,4] A[0:19]
[1,3,4] D[0:15]
[4] nRAS0
[4] nUCAS
[4] nLCAS
[3,4] nWE
[1,3,4] nOE
[3,4] nWE
[4] nROMCS
[1,3,4] nOE
nRESET [3,4]

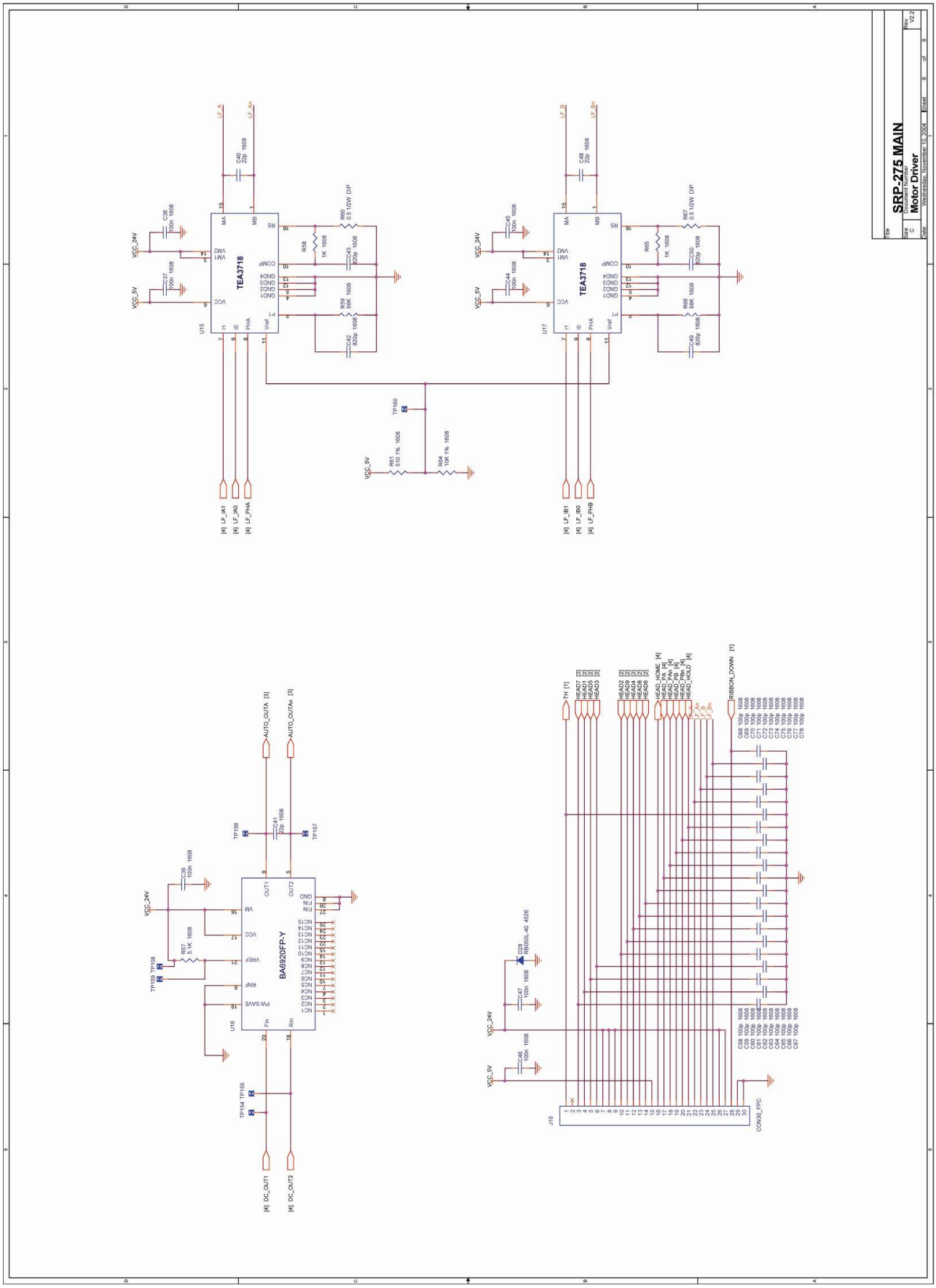
SRP-275 MAIN
Motor Driver
TEA3718
BA6920FP-Y
CON30_FPC

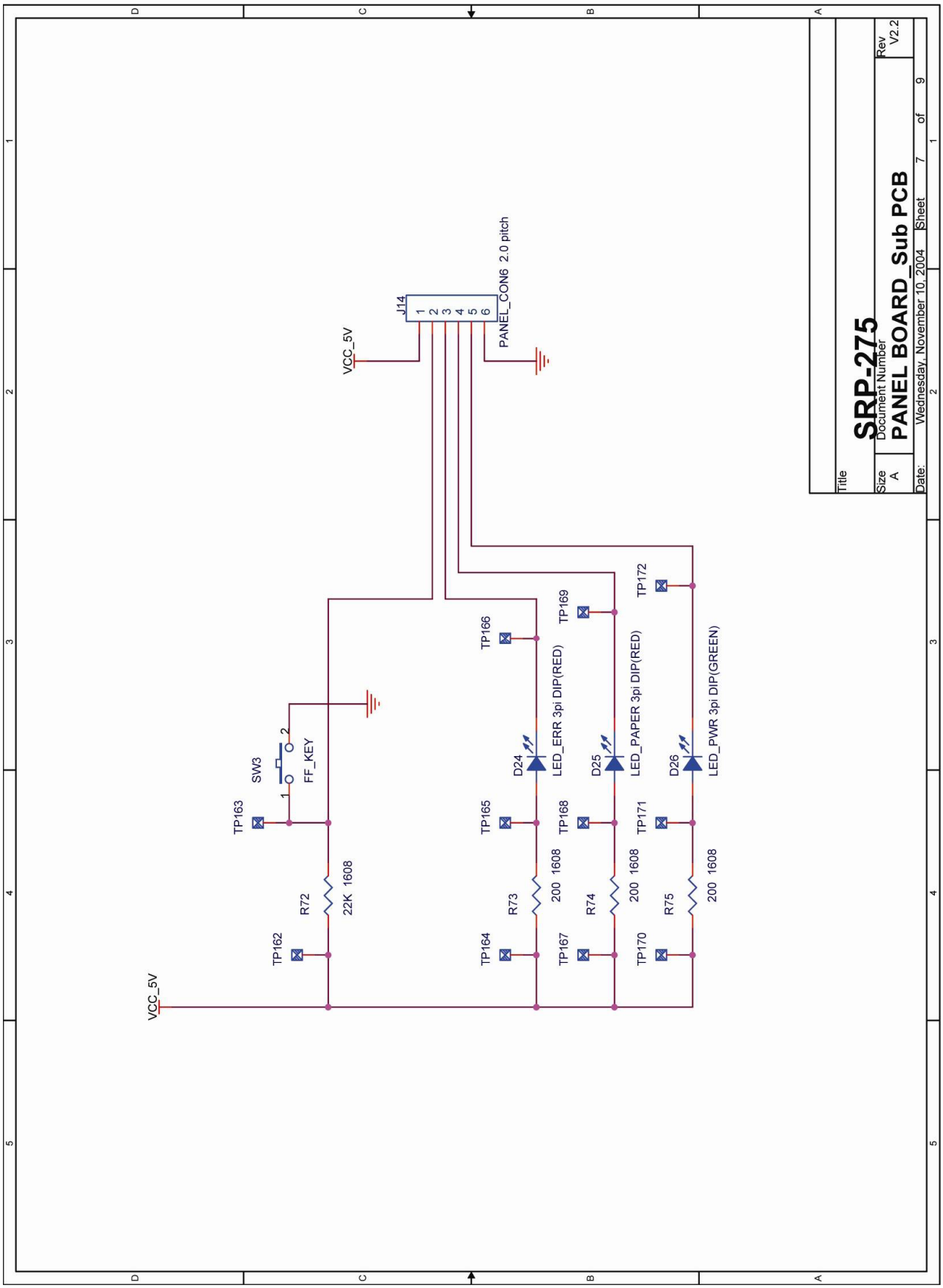
J14
PANEL_CON6 2.0 pitch
VCC_5V
SW3
FF_KEY
TP163
TP162
R72
22K 1608
TP166
TP165
TP164
R73
200 1608
D24
LED_ERR 3pi DIP(RED)
TP169
TP168
TP167
R74
200 1608
D25
LED_PAPER 3pi DIP(RED)
TP172
TP171
TP170
R75
200 1608
D26
LED_PWR 3pi DIP(GREEN)
Title
SRP-275
Size A
Document Number
PANEL BOARD_Sub PCB
Rev V2.2
Date: Wednesday, November 10, 2004
Sheet 7 of 9

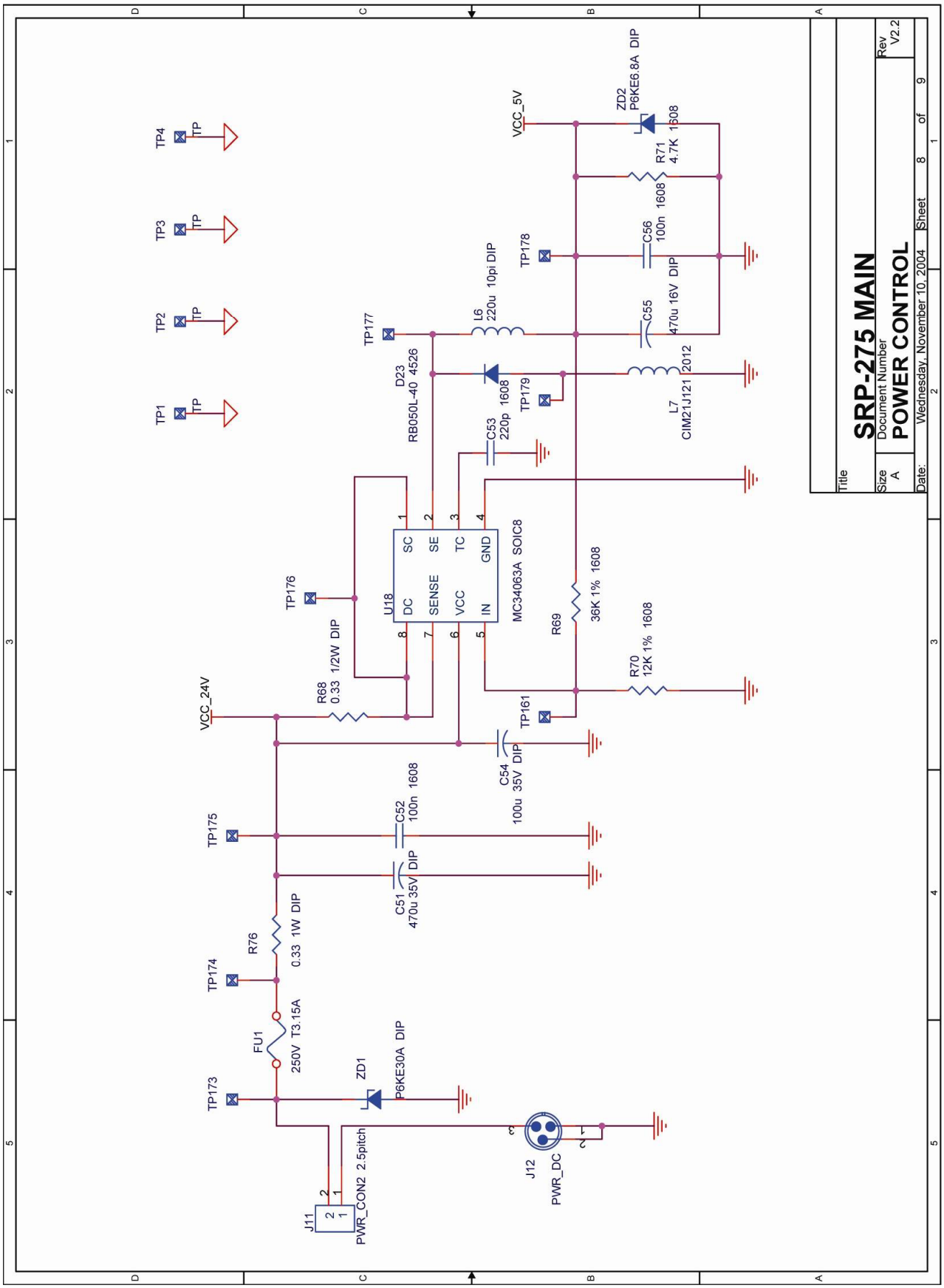
SRP-275 MAIN
Document Number
POWER CONTROL
Rev V2.2
Size A
Date: Wednesday, November 10, 2004
Sheet 8 of 9
TP1
TP2
TP3
TP4
TP173
TP174
TP175
TP176
TP177
TP178
TP179
TP161
FU1 250V T3.15A
R76 0.33 1W DIP
R68 0.33 1/2W DIP
R69 36K 1% 1608
R70 12K 1% 1608
R71 4.7K 1608
ZD1 P6KE30A DIP
ZD2 P6KE6.8A DIP
D23 RB050L-40 4526
L6 220u 10pi DIP
L7 CIM21J121 2012
C51 470u 35V DIP
C52 100n 1608
C53 220p 1608
C54 100u 35V DIP
C55 470u 16V DIP
C56 100n 1608
U18 MC34063A SOIC8
SC SE TC GND
DC SENSE VCC IN
VCC_5V
VCC_24V
J11 PWR_CON2 2.5pitch
J12 PWR_DC

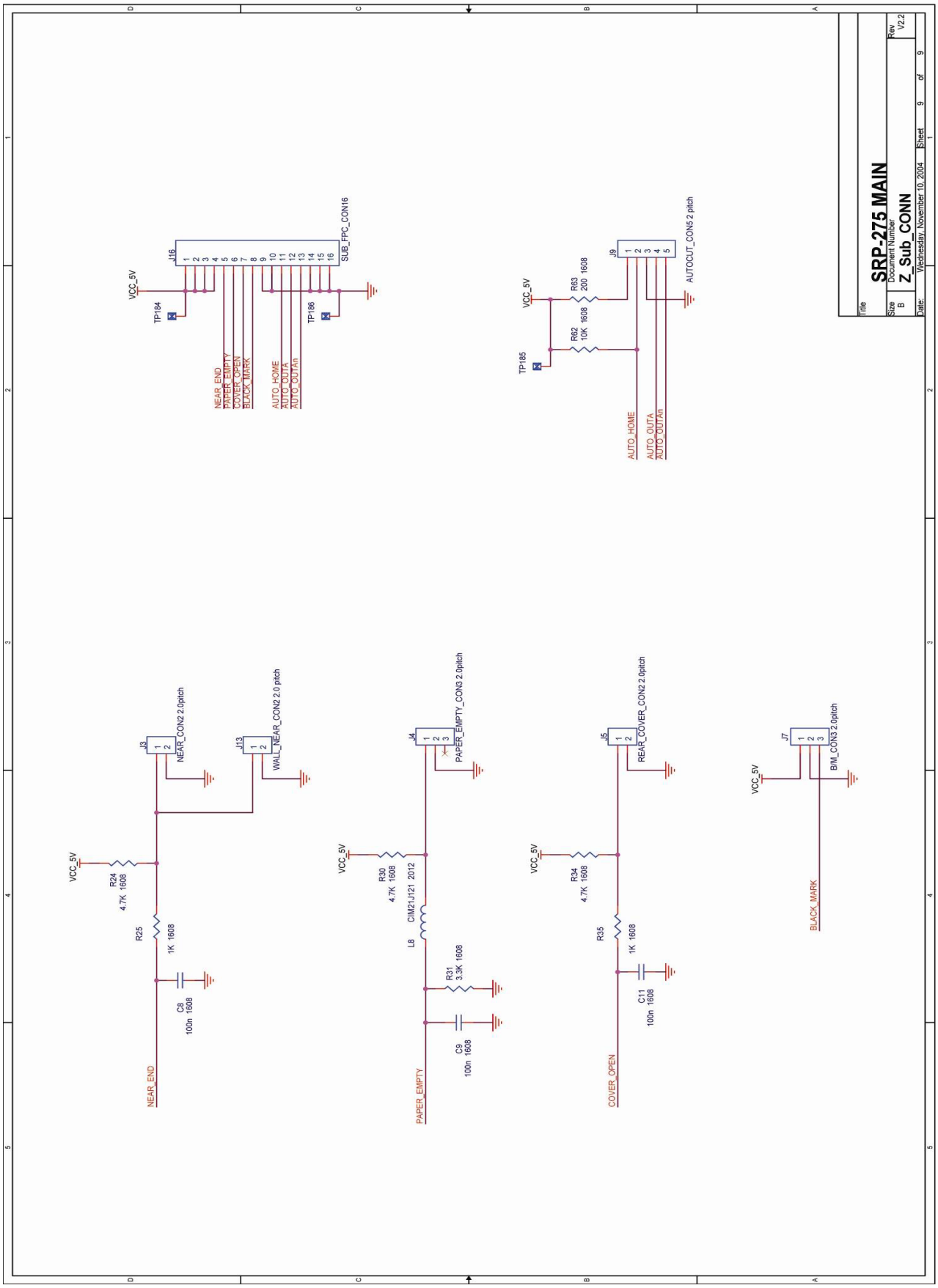
SRP-275 MAIN
Z_Sub_CONN
Rev V2.2
Wednesday, November 10, 2004
SUB_FPC_CON16
NEAR_END
PAPER_EMPTY
COVER_OPEN
BLACK_MARK
AUTO_HOME
AUTO_OUTA
AUTO_OUTAn
AUTOCUT_CON5 2 pitch
NEAR_CON2 2.0pitch
WALL_NEAR_CON2 2.0 pitch
PAPER_EMPTY_CON3 2.0pitch
REAR_COVER_CON2 2.0pitch
B/M_CON3 2.0pitch
VCC_5V
R24 4.7K 1608
R25 1K 1608
C8 100n 1608
R30 4.7K 1608
L8 CIM21J121 2012
R31 3.3K 1608
C9 100n 1608
R34 4.7K 1608
R35 1K 1608
C11 100n 1608
R62 10K 1608
R63 200 1608

4-5-2 Head circuit diagram

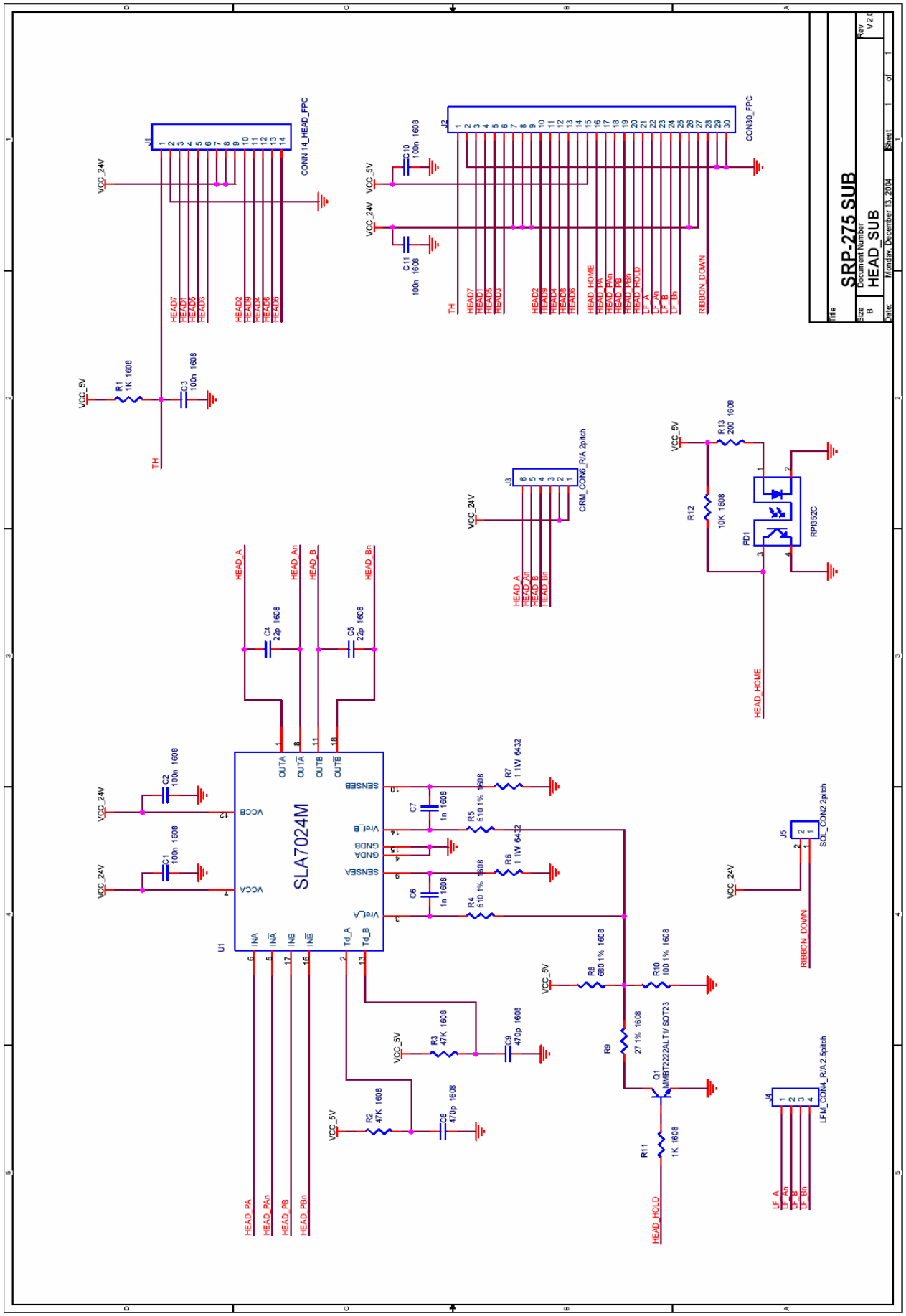

4-5-3 Serial Interface Diagram (RS-232C)

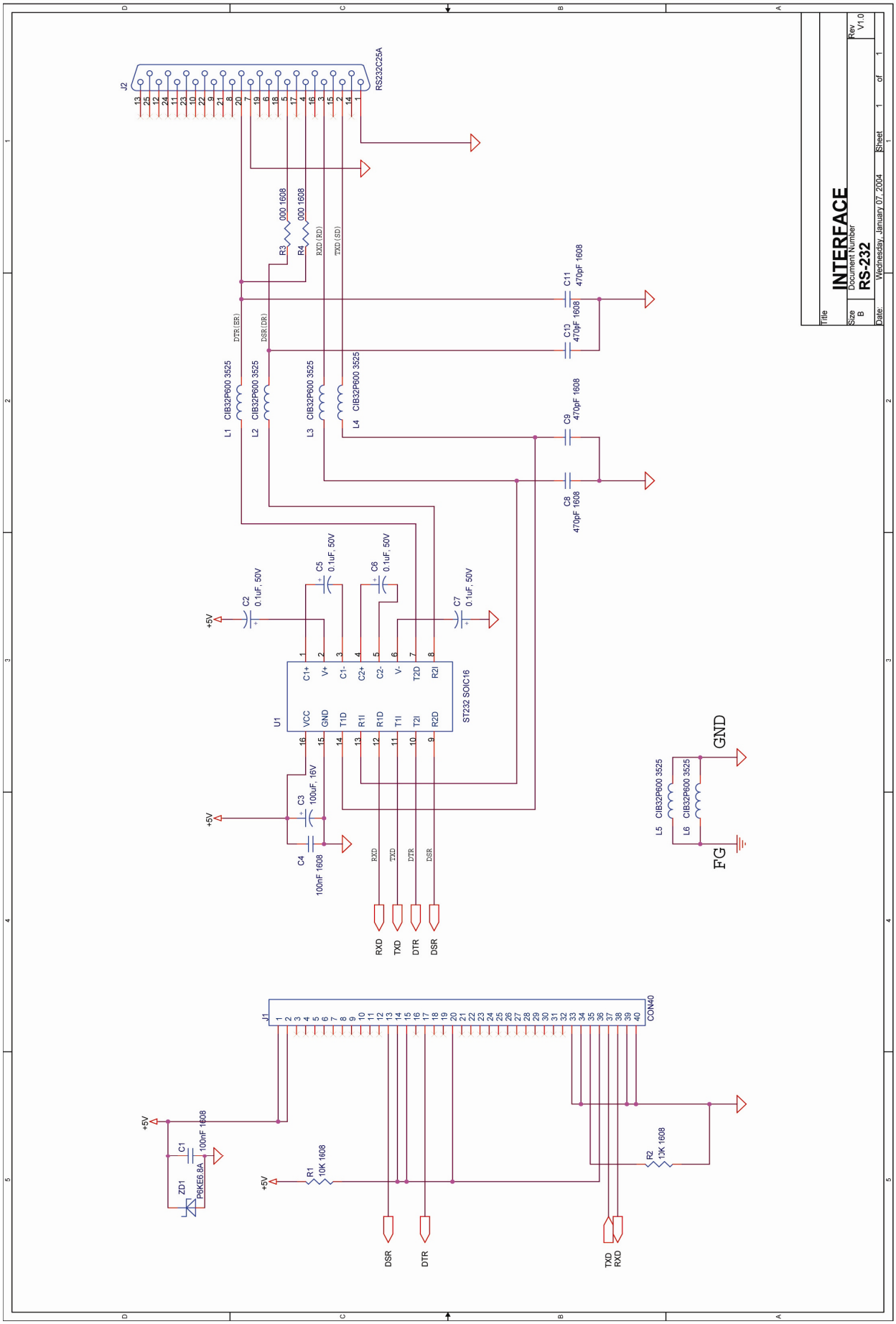

4-5-4 Parallel Interface Diagram (IEEE-1284)

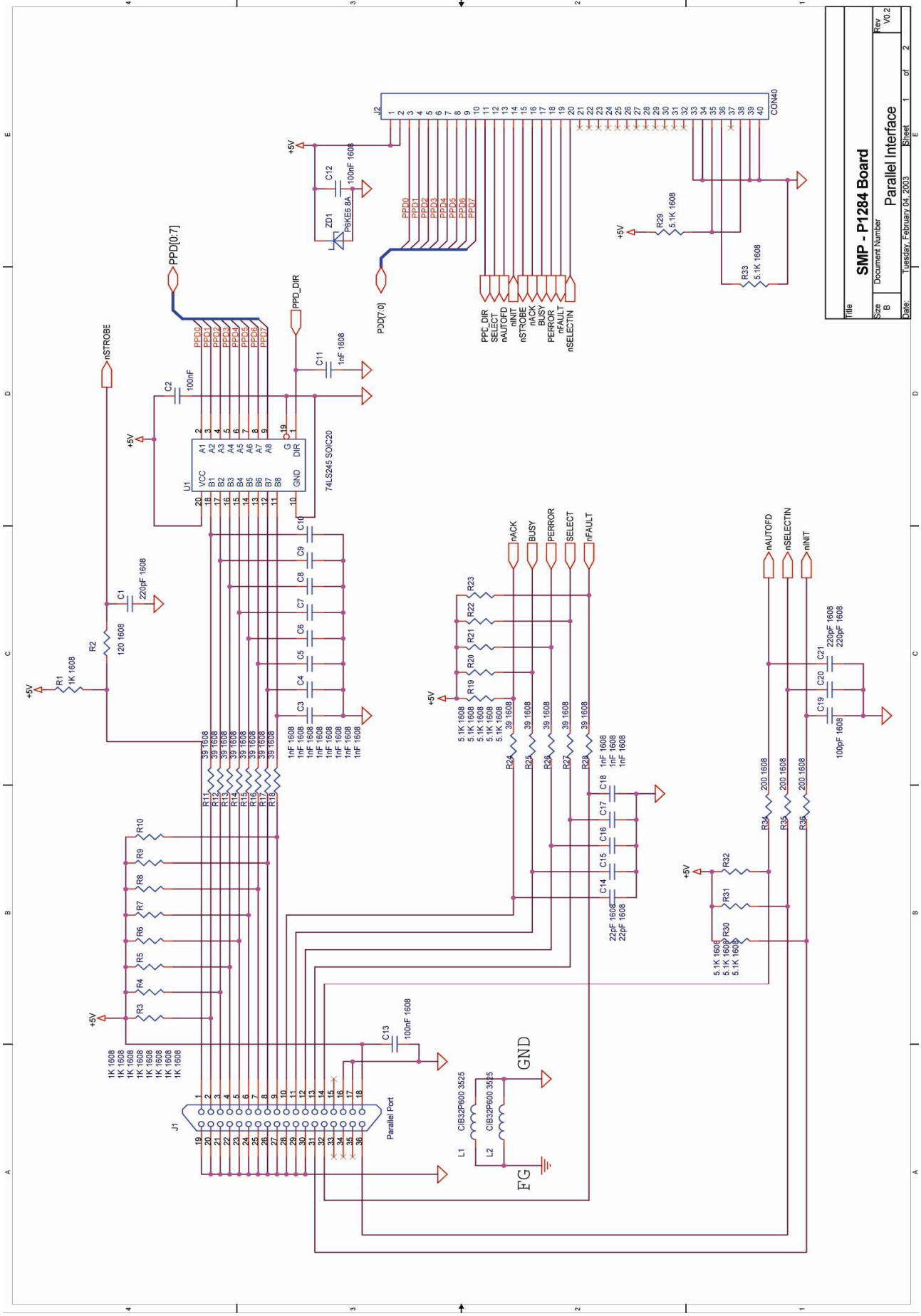

4-5-5 USB Interface Diagram (Universal Serial Bus)

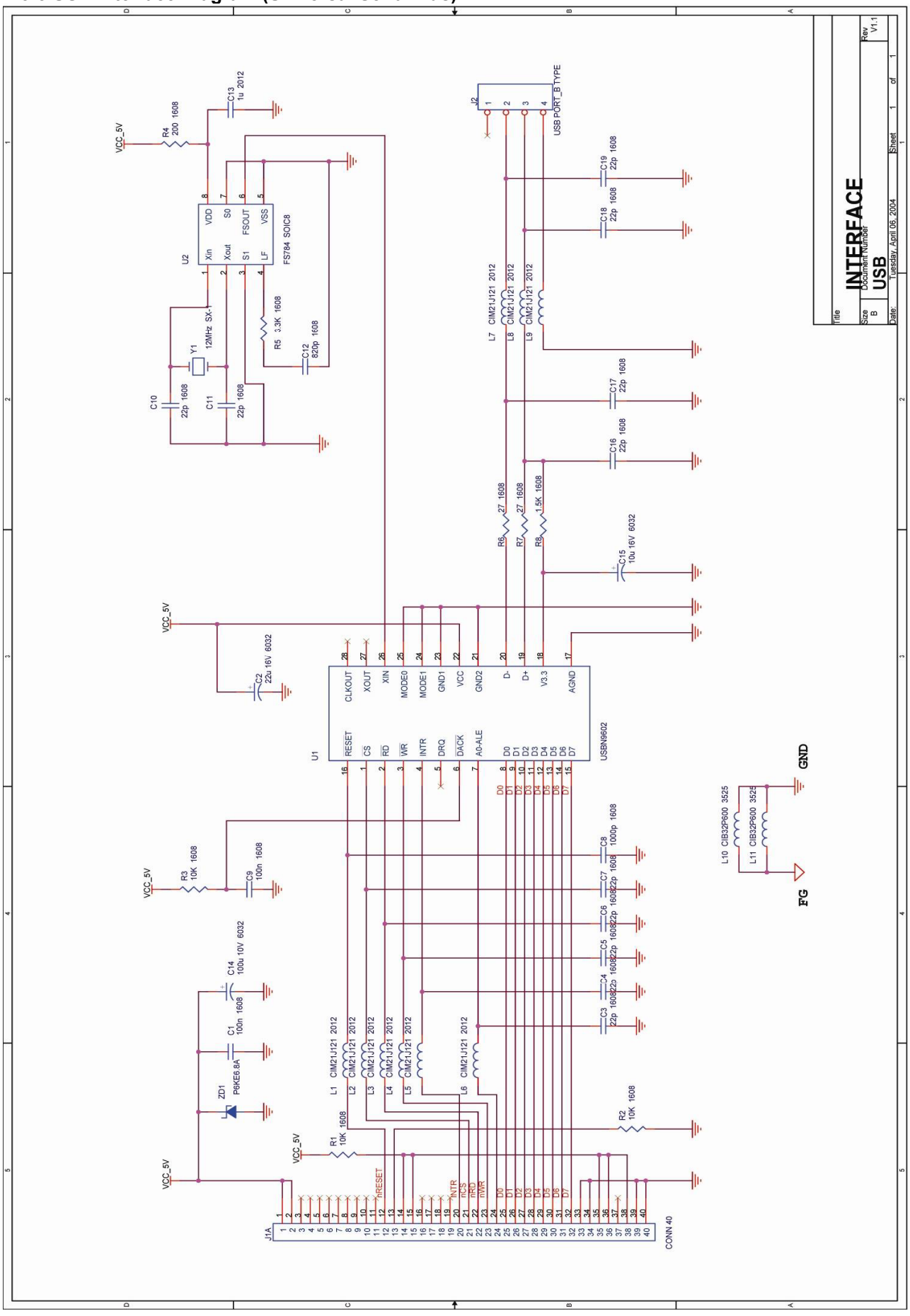

5. Disassembly and Assembly

To disassembly this printer, perform the assembly procedures described in the reverse sequence. First, the main-assembly blocks are disassembled and divided into the sub assembly blocks, then each of the individual blocks is disassembled.

When assembling the printer, check each part and its attachment position by referring to PPL(Product Parts List).

5-1 SMP715 Printer mechanism unit Sub-assembly

5-1-1 Frame-main caulking assy

Part name	Assembly procedure
① Frame-main ② Shaft-R/F idle ③ Shaft-gear pulley ④ Shaft-reduction A/C -2ea. ⑤ Shaft-ribbon frame L ⑥ Shaft-ribbon frame R ⑦ Shaft-ribbon feed ⑧ Shaft-lever_CC	1. Caulk ② **Shaft-R/F idle**, ③ **Shaft-gear pulley**, two ④ **Shaft-reduction A/C** and ⑦ **Shaft-ribbon feed** on ① **Frame-main**. 2. Caulk ⑤ **Shaft-ribbon frame L** and ⑧ **Shaft-lever_CC** on ① **Frame-main**. 3. Caulk ⑥ **Shaft-ribbon frame R** on ① **Frame-main**.

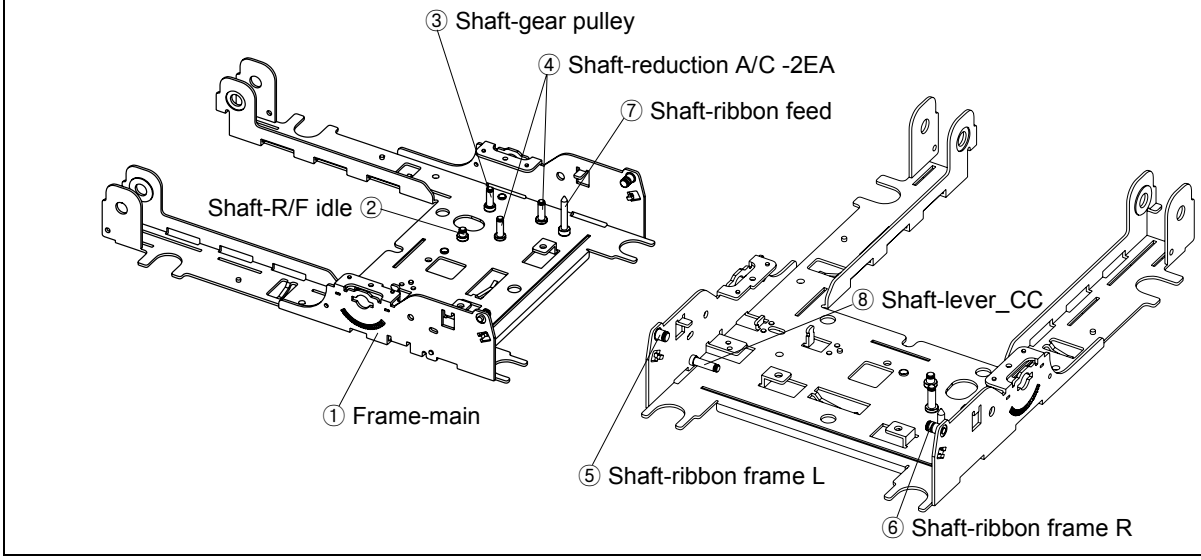

5-1-2 Ribbon-feeder assy

Part name	Assembly procedure
① Ribbon-feeder ② Spring-ribbon-feeder ③ Gear-ribbon feeder	1. Grease ② **Spring-ribbon-feeder** with HG-31S and then insert ② **Spring-ribbon-feeder** in ① **Ribbon-feeder**. 2. Insert ③ **Gear-ribbon feeder** to four hooks of ① **Ribbon-feeder**.

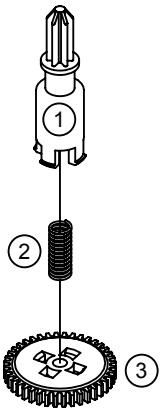

5-1-3 Lever-ribbon-feeder assy

Part name	Assembly procedure
① Lever-ribbon feed ② Shaft-reduction B ③ Wave washer ④ Gear-re_B ⑤ Ring-e hole (ø2.5)	1. Caulk ② **Shaft-reduction B** on ① **Lever-ribbon feed** and then grease ② **Shaft-reduction B** with HG-31S. 2. Insert ③ **Wave washer** to ② **Shaft-reduction B** and then grease ③ **Wave washer** with HG-31S. 3. Insert ④ **Gear-re_B** to ② **Shaft-reduction B** and then fasten ⑤ **Ring-e hole (ø2.5)** to ② **Shaft-reduction B**.

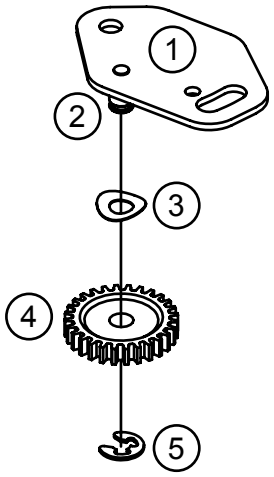

5-1-4 Lever-tension assy

Part name	Assembly procedure
① Lever-tension belt ② Shaft-pulley ③ Pulley ④ Washer-plain (ø2.6)	1. Caulk ② **Shaft-pulley** on ① **Lever-tension belt** and then grease ② **Shaft-pulley** with HG-31S. 2. Insert ③ **Pulley** to ② **Shaft-pulley** and then fasten ④ **Washer-plain (ø2.6)** to ② **Shaft-pulley**. **<Check point>** Check ③ **Pulley** to rotate smoothly.

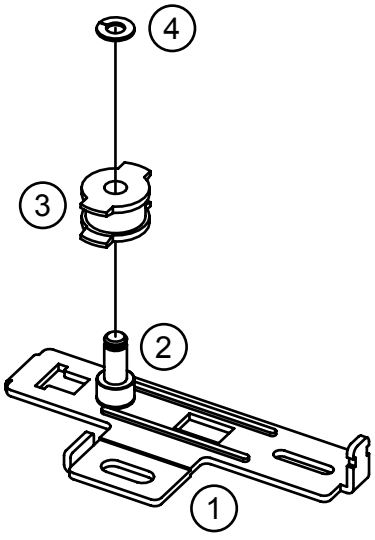

5-1-5 Carriage head assy

Part name	Assembly procedure
① Head-carriage-(WI) ② Bearing-metal -2ea.	1. Insert two ② **Bearing-metal** into ① **Head-carriage-(WI)**

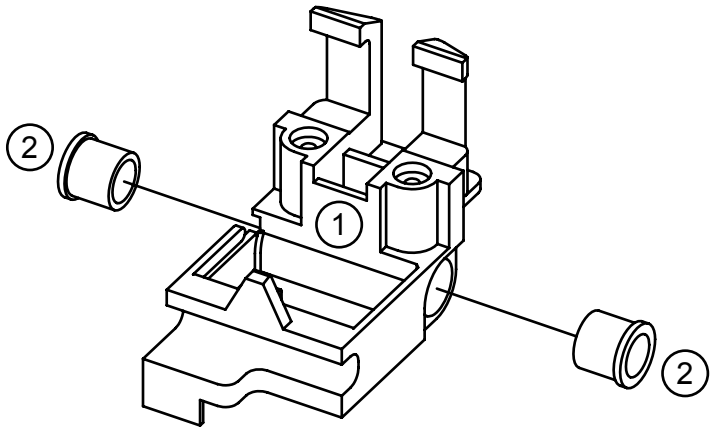

5-1-6 Head-cover assy

Part name	Assembly procedure
① Cover-head ② Label hot ③ Screw-manual (M4.0) ④ Ring-e hole (ø3.0)	1. Paste ② **Label hot** on the left bottom side of ① **Cover-head**. 2. Insert ③ **Screw-manual (M4.0)** into the right side hole of ① **Cover-head**. 3. Assemble ④ **Ring-e hole (ø3.0)** onto the starting point of a spiral during adhering closely to ① **Cover-head**.

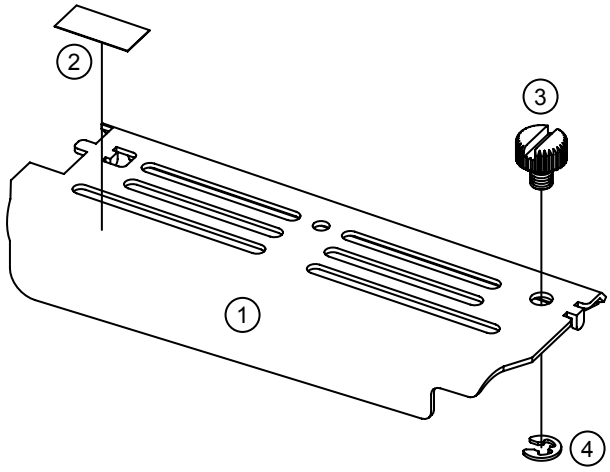

5-1-7 Frame basket-A assy

Part name	Assembly procedure
① Frame basket ② Roller holder -2ea. ③ Shaft-roller holder ④ Spring-roller holder -2ea. ⑤ Platen paper guide ⑥ Frame-holder basket-L ass'y (Sub-assembly 5-1-9) ⑦ Frame-holder basket-R ass'y (Sub-assembly 5-1-11) ⑧ Frame-housing cutter lower ass'y (Sub-assembly 5-1-12) ⑨ Harness (Jumper cable) ⑩ Screw-taptite (M3×6) -4ea. ⑪ Screw-taptite (M3×4) -2ea.	1. Tighten ⑥ **Frame-holder basket-L ass'y** to ① **Frame basket** with two ⑩ **Screw-taptite (M3×6)**. 2. Tighten ⑨ **Harness (Jumper cable)** and ⑦ **Frame-holder basket-R ass'y** to ① **Frame basket** with two ⑩ **Screw-taptite (M3×6)**. 3. Insert two ② **Roller holder** to ③ **Shaft-roller holder** and then assemble two ④ **Spring-roller holder** to ③ **Shaft-roller holder**, ⑥ **Frame-holder basket-L ass'y** and ⑦ **Frame-holder basket-R ass'y**. 4. Insert ⑤ **Platen paper guide** in ① **Frame basket**. 5. Tighten ⑧ **Frame-housing cutter lower ass'y** to ⑥ **Frame-holder basket-L ass'y** and ⑦ **Frame-holder basket-R ass'y** with two ⑪ **Screw-taptite (M3×4)**.

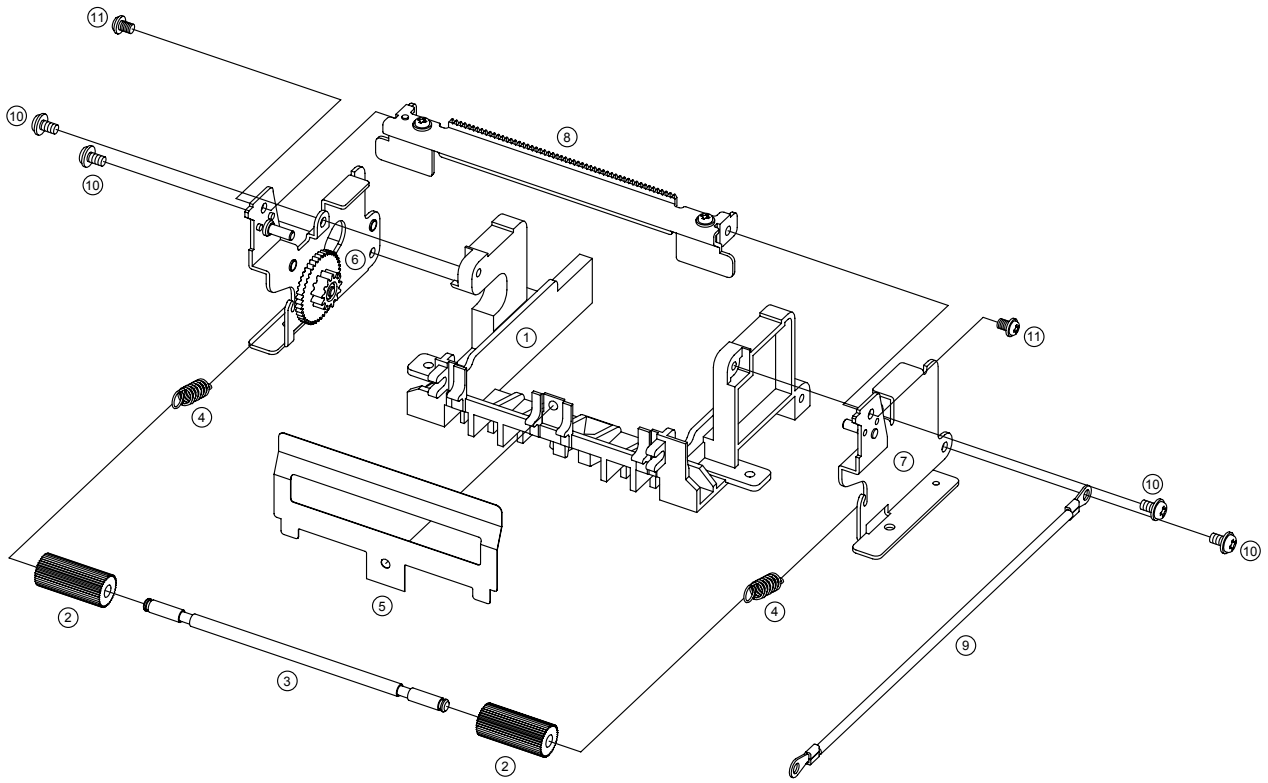

5-1-8 Frame basket-C assy

Part name	Assembly procedure
① Frame basket ② Roller holder -2ea. ③ Shaft-roller holder ④ Spring-roller holder -2ea. ⑤ Platen paper guide ⑥ Frame-holder basket-L ass'y (Sub-assembly 5-1-9) ⑦ Frame-holder basket-R ass'y (Sub-assembly 5-1-11) ⑧ Cutter lower ass'y (Sub-assembly 5-1-13) ⑨ Harness (Jumper cable) ⑩ Screw-taptite (M3×6) -4ea. ⑪ Screw-taptite (M3×4) -2ea.	1. Tighten ⑥ **Frame-holder basket-L ass'y** to ① **Frame basket** with two ⑩ **Screw-taptite (M3×6)**. 2. Tighten ⑨ **Harness (Jumper cable)** and ⑦ **Frame-holder basket-R ass'y** to ① **Frame basket** with two ⑩ **Screw-taptite (M3×6)**. 3. Insert two ② **Roller holder** to ③ **Shaft-roller holder** and then assemble two ④ **Spring-roller holder** to ③ **Shaft-roller holder**, ⑥ **Frame-holder basket-L ass'y** and ⑦ **Frame-holder basket-R ass'y**. 4. Insert ⑤ **Platen paper guide** in ① **Frame basket**. 5. Tighten ⑧ **Cutter lower ass'y** to ⑥ **Frame-holder basket-L ass'y** and ⑦ **Frame-holder basket-R ass'y** with two ⑪ **Screw-taptite (M3×4)**.

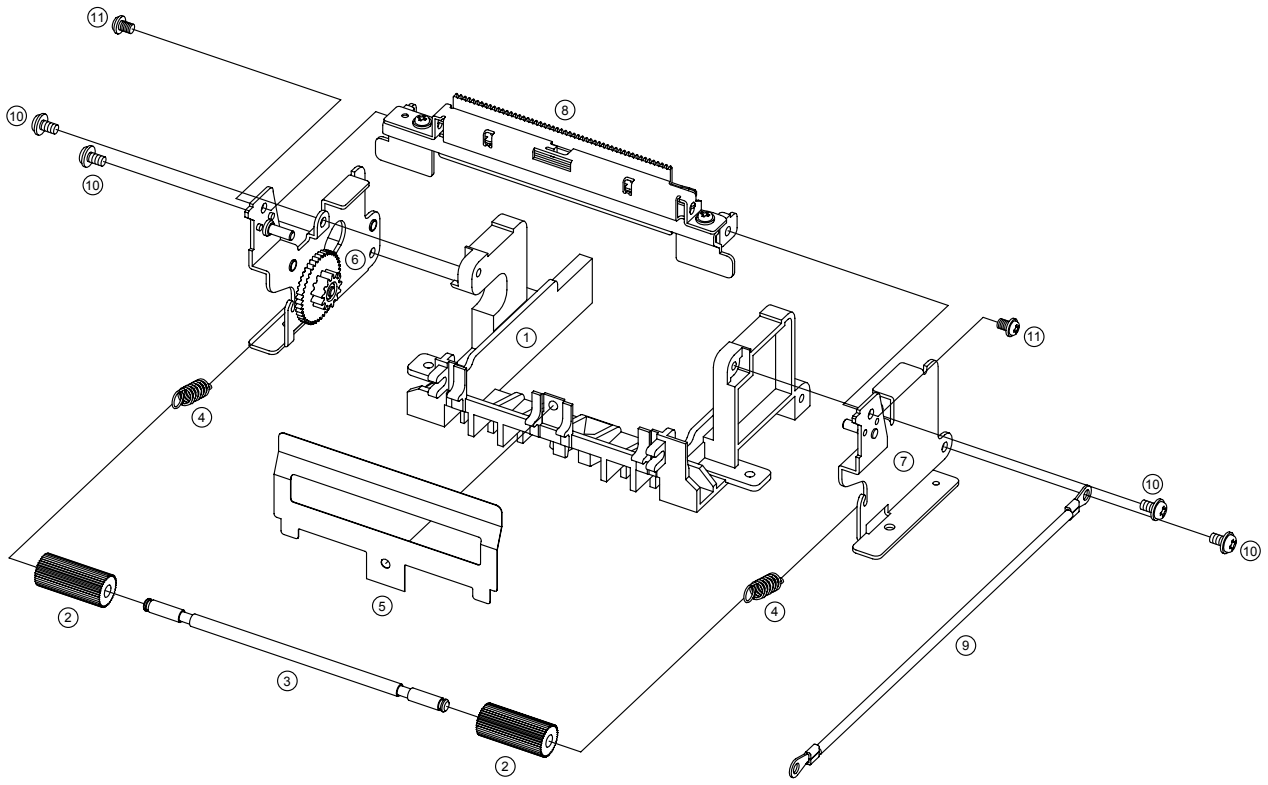

5-1-9 Frame-holder basket-L assy

Part name	Assembly procedure
① Frame-holder basket-L caulking ass'y ② Gear-reduction ③ Washer-plain (ø2.6)	1. Grease **Shaft-reduction** of ① **Frame-holder basket-L caulking ass'y** with HG-31S. 2. Insert ② **Gear-reduction** to **Shaft-reduction** of ① **Frame-holder basket-L caulking ass'y** and then assemble ③ **Washer-plain (ø2.6)**. **<Check point>** Check ② **Gear-reduction** to rotate smoothly.

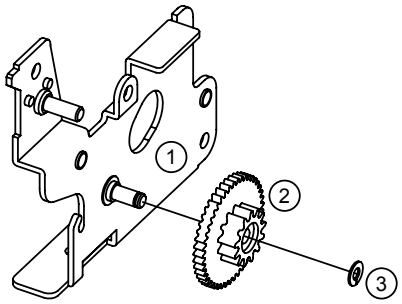

5-1-10 Frame-holder basket-L caulking assy

Part name	Assembly procedure
① Frame-holder basket-L ② Shaft-locking ③ Shaft-reduction	1. Caulk ② **Shaft-locking** and ③ **Shaft-reduction** on ① **Frame-holder basket-L**.

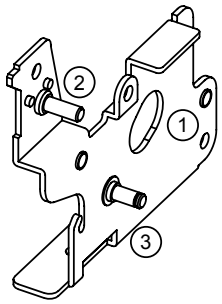

5-1-11 Frame-holder basket-R caulking assy

Part name	Assembly procedure
① Frame-holder basket-R ② Shaft-locking	1. Caulk ② **Shaft-locking** on ① **Frame-holder basket-R.**

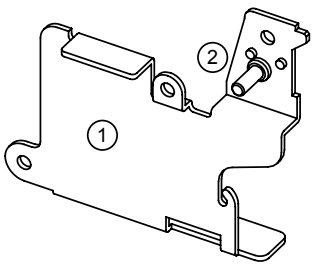

5-1-12 Frame-housing cutter lower assy

Part name	Assembly procedure
① Frame-housing cutter lower ② Screw-taptite (M3×4) -2ea.	1. Tighten two ② **Screw-taptite (M3×4)** on ① **Frame-housing cutter lower**.

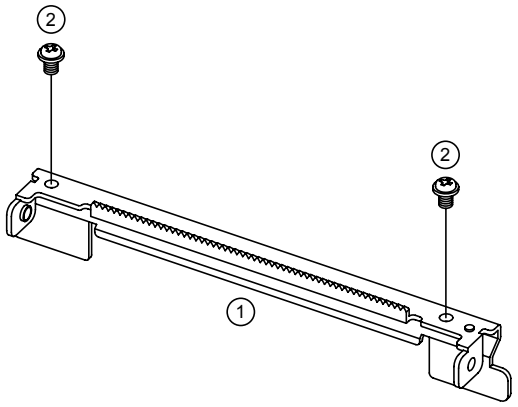

5-1-13 Cutter lower assy

Part name	Assembly procedure
① Cutter lower ② Frame-housing cutter upper ③ Spring-cutter lower -2ea. ④ Frame-housing cutter lower ⑤ Screw-taptite (M3×4) -2ea.	1. Insert ① **Cutter lower** in ② **Frame-housing cutter upper** and then insert two ③ **Spring-cutter lower** between ① **Cutter lower** and ② **Frame-housing cutter upper** 2. Tighten ② **Frame-housing cutter upper** to ④ **Frame-housing cutter lower** with two ⑤ **Screw-taptite (M3×4)**.

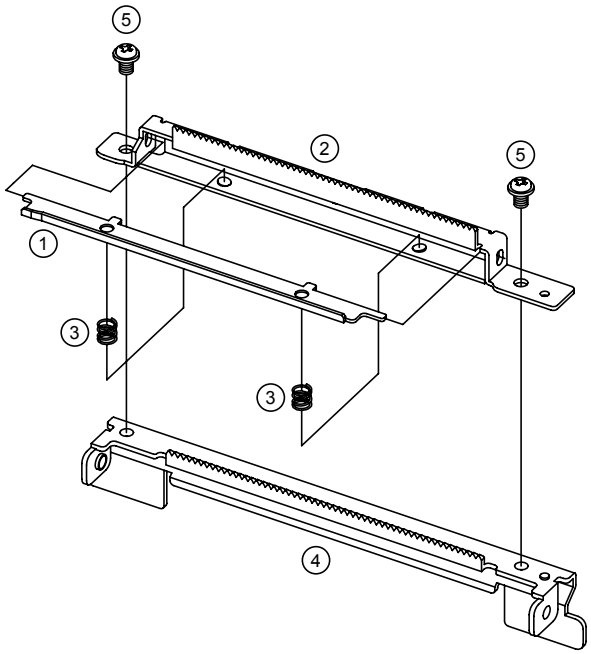

5-1-14 Frame-rotator assy

Part name	Assembly procedure
① Frame rotator ② Guide spring -2ea. ③ Frame-pivot locking-L ④ Frame-pivot locking-R ⑤ Screw-taptite (M3×4) -4ea. ⑥ Arm open ⑦ Screw-arm open ⑧ Spring-button ⑨ Frame-clamshell locking ⑩ Shaft-clamshell locking ⑪ Spring-locking-L ⑫ Spring-locking-R ⑬ Ring-e hole (ø2.5) -2ea. ⑭ Holder platen ass'y (Sub-assembly I-1) ⑮ Shaft-housing platen ⑯ Frame-bar clamshell ⑰ Screw-taptite (M3×6) -2ea. ⑱ Spring-holder platen -2ea. ⑲ Shaft-rubber roller ⑳ Poly-bearing -2ea. ㉑ Ring-e hole (ø3.0) -4ea. ㉒ Gear-Feeding ㉓ Guide paper	1. Insert two ② **Guide spring** in two holes of ① **Frame rotator**. 2. Tighten ③ **Frame-pivot locking-L** and ④ **Frame-pivot locking-R** to ① **Frame rotator** with each of two ⑤ **Screw-taptite (M3×4)**. 3. Tighten ⑥ **Arm open** between ④ **Frame-pivot locking-R** and ① **Frame rotator** with ⑦ **Screw-arm open**. 4. Assemble ⑧ **Spring-button** between ⑥ **Arm open** and ④ **Frame-pivot locking-R**. 5. Insert ⑨ **Frame-clamshell locking** between ③ **Frame-pivot locking-L** and ④ **Frame-pivot locking-R** and then insert ⑩ **Shaft-clamshell locking**, ⑪ **Spring-locking-L** and ⑫ **Spring-locking-R**. And assemble two ⑬ **Ring-e hole (ø2.5)** to ⑩ **Shaft-clamshell locking**. 6. Attach ⑭ **Holder platen ass'y** to ① **Frame rotator** and then insert ⑮ **Shaft-housing platen** into the hole of ① **Frame rotator**. And assemble two ㉑ **Ring-e hole (ø3.0)** to ⑮ **Shaft-housing platen**. 7. Tighten ⑯ **Frame-bar clamshell** to ⑭ **Holder platen ass'y** with ⑰ **Screw-taptite (M3×6)**. And assemble two ⑱ **Spring-holder platen** between ⑯ **Frame-bar clamshell** and two hooks of ① **Frame rotator**. 8. Insert two ⑳ **Poly-bearing** in two holes of ① **Frame rotator** and then insert ⑲ **Shaft-rubber roller** into two holes of ⑳ **Poly-bearing**. And assemble two ㉑ **Ring-e hole (ø3.0)** to ⑲ **Shaft-rubber roller**. 9. Insert ㉒ **Gear-Feeding** to the left side of ⑲ **Shaft-rubber roller**. 10. Assemble ㉓ **Guide paper** to ⑮ **Shaft-housing platen** and ⑲ **Shaft-rubber roller**.

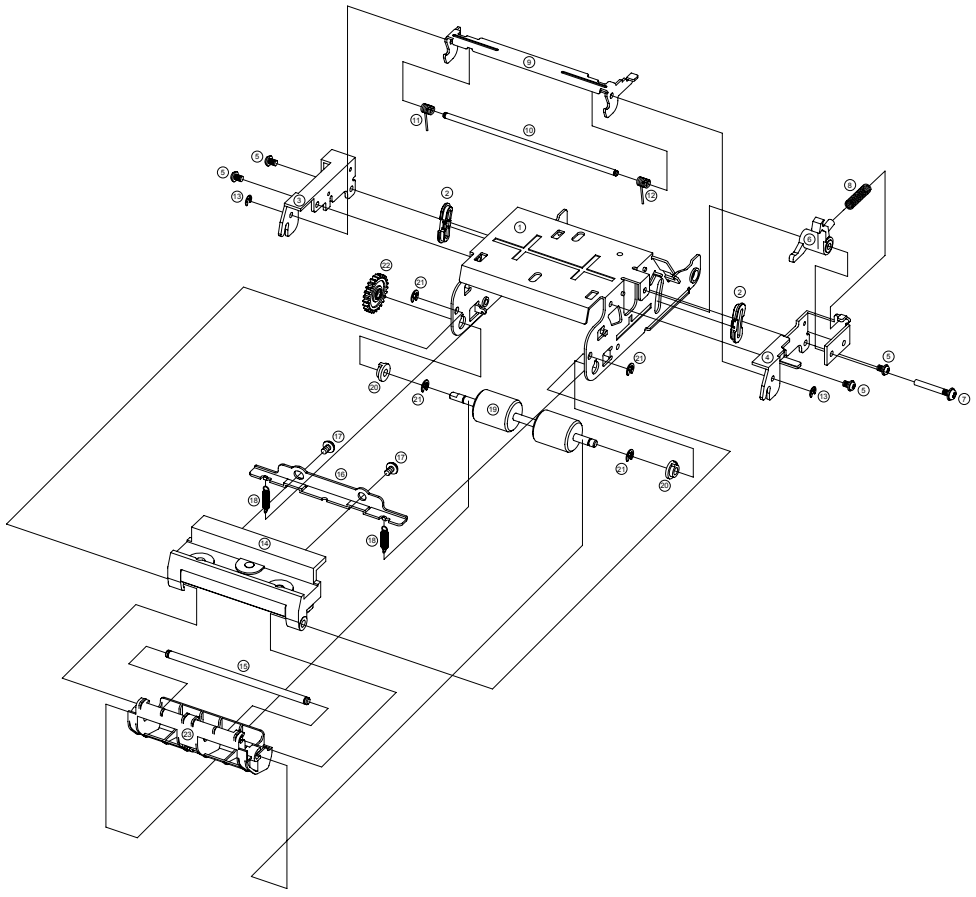

5-1-15 Holder platen assy

Part name	Assembly procedure
① Holder platen ② Platen ③ Rubber platen -3ea. ④ Bar holder platen ⑤ Screw-taptite (M3×10) -2ea.	1. Insert three ③ **Rubber platen** in ② **Platen**. 2. Attach ② **Platen** to ① **Holder platen**. 3. Tighten ④ **Bar holder platen** to ① **Holder platen** with two ⑤ **Screw-taptite (M3×10)**.

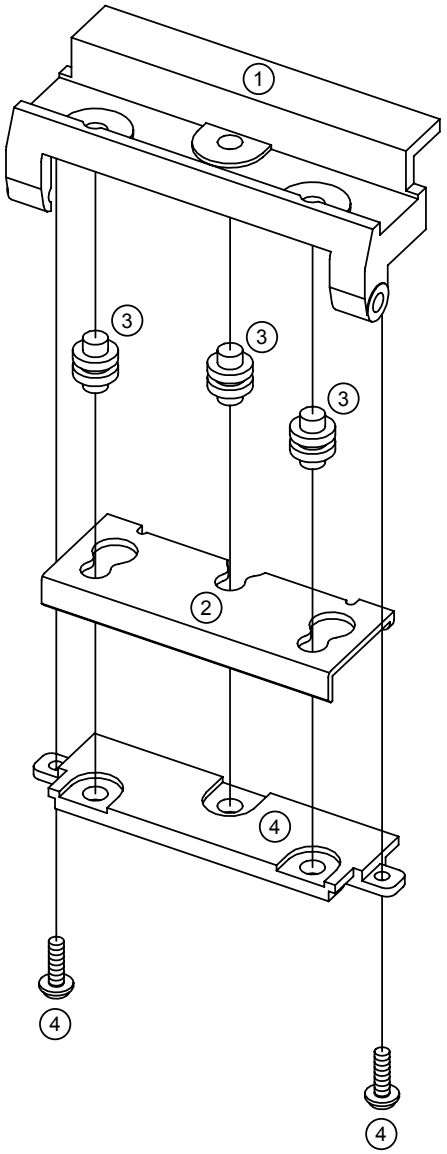

5-2 SMP715 Printer mechanism unit Main-assembly

5-2-1 Main-assembly A

Part name	Assembly procedure
① Frame-main caulking ass'y (Sub-assembly 5-1-1) ② Label sticker ③ Plate-insulation ④ Lever-change color ⑤ Assy-gear-pulley ⑥ Gear-RE_B ⑦ Washer-plain (ø2.6) -3ea. ⑧ Solenoid ⑨ Spring-solenoid ⑩ Screw-machine (M2×2.5) ⑪ Lever-tension ass'y (Sub-assembly 5-1-4)	1. Paste ② **Label sticker** and ③ **Plate-insulation** on ① **Frame-main caulking ass'y**. 2. Grease six shafts on ① **Frame-main caulking ass'y** with HG-31S. 3. Insert ④ **Lever-change color** into **Shaft-lever_CC** and then assemble ⑦ **Washer-plain (ø2.6)**. 4. Insert ⑤ **Assy-gear-pulley** and ⑥ **Gear-RE_B** to the **Shaft-gear pulley** and **Shaft-R/F idle** and then assemble each of ⑦ **Washer-plain (ø2.6)**. 5. Insert ⑨ **Spring-solenoid** between ⑧ **Solenoid** and ④ **Lever-change color** and then tighten ⑧ **Solenoid** to ① **Frame-main caulking ass'y** with ⑩ **Screw-machine (M2×2.5)**. 6. Attach ⑪ **Lever-tension ass'y** on ① **Frame-main caulking ass'y**.

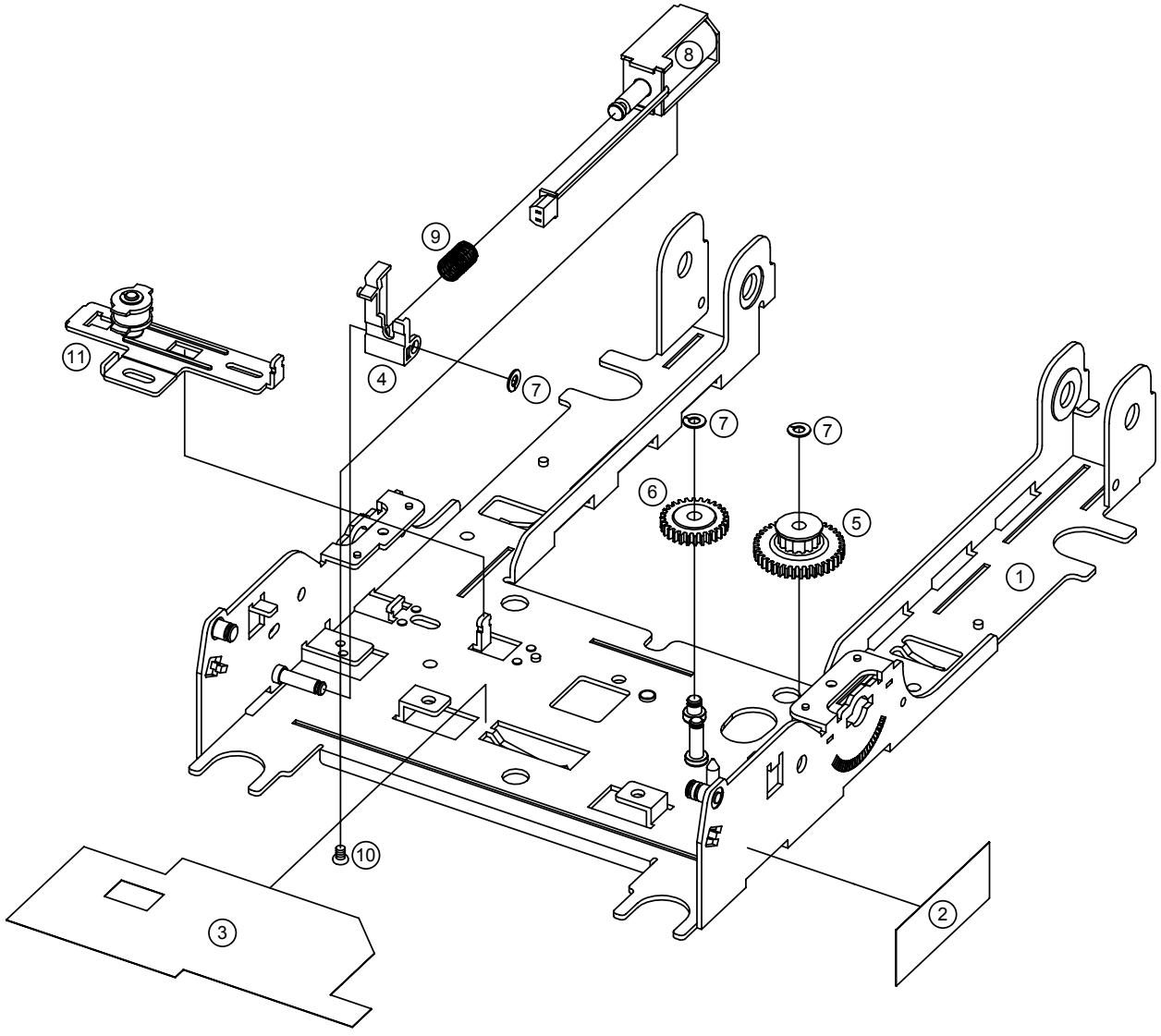

5-2-2 Main-assembly B

Part name	Assembly procedure
① Gear-RE_A ② Ribbon-feeder ass'y (Sub-assembly 5-1-2) ③ Gear-RE_C ④ Cover HF gear train ⑤ Lever-ribbon-feeder ass'y ⑥ Washer-plain (ø2.6) -2ea. ⑦ PCB-head ass'y ⑧ FPC-head ⑨ FPC-30pin ⑩ Screw-taptite (M3×4) -3ea. ⑪ Spring-lever-tension ⑫ Carriage head ass'y (Sub-assembly 5-1-5) ⑬ Belt-round	1. Insert ① **Gear-RE_A**, ② **Ribbon-feeder ass'y** and ③ **Gear-RE_C** to three shafts of **Frame-main**. 2. Insert ④ **Cover HF gear train** to two shafts. 3. Insert ⑤ **Lever-ribbon-feeder ass'y** to two shafts and then assemble two ⑥ **Washer-plain (ø2.6)**. 4. Insert ⑧ **FPC-head**, ⑨ **FPC-30pin** and the 2pin connector of **Solenoid** to ⑦ **PCB-head ass'y** and then tighten two ⑩ **Screw-taptite (M3×4)**. 5. Assemble ⑪ **Spring-lever-tension** between **Lever-tension ass'y** and the hook of **Frame-main**. 6. Insert ⑫ **Carriage head ass'y** to ⑬ **Belt-round** and then assemble **Belt-round** between **Pulley** and **Assy-gear-pulley**. And tighten **Lever-tension ass'y** to **Frame-main** with ⑩ **Screw-taptite (M3×4)**.

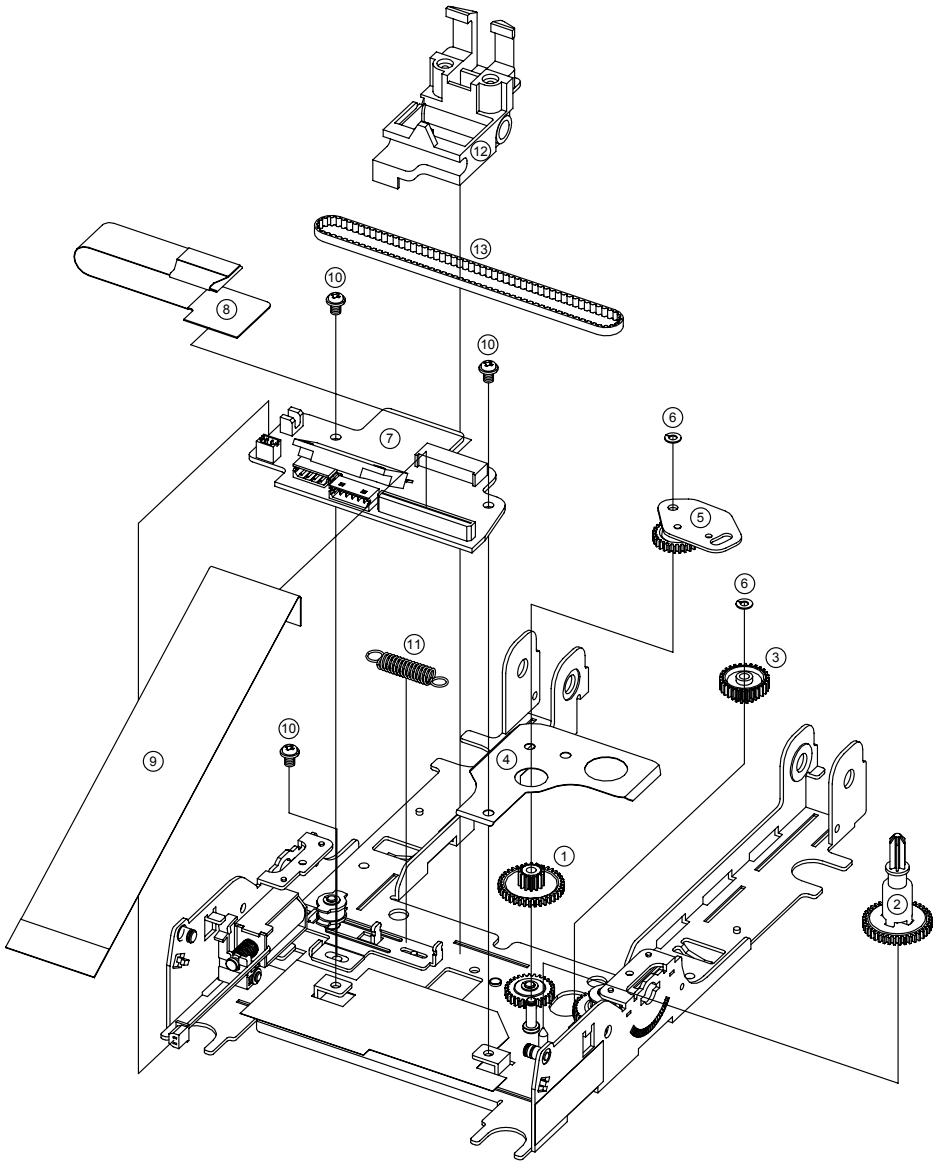

5-2-3 Main-assembly C

Part name	Assembly procedure
① Frame basket ass'y ② Screw-taptite (M3×6) -2ea. ③ Shaft-head_guide ④ Lever-ad -2ea. ⑤ Shaft-head carriage ⑥ Ring-e hole (ø3.0) ⑦ Printer-head ⑧ Screw-tapping (M3×10) -2ea. ⑨ Bracket-head-cover-L ⑩ Bracket-head-cover-R ⑪ Screw-taptite (M2.6×3) -2ea.	1. Tighten ① **Frame basket ass'y** on **Frame-main** with two ② **Screw-taptite (M3×6)**. 2. Insert **Carriage head ass'y** to ③ **Shaft-head_guide** and then insert ③ **Shaft-head_guide** into two holes of **Frame-main**. 3. Insert two ④ **Lever-ad** to the end of ③ **Shaft-head_guide** and then rotate two ④ **Lever-ad** downward. And oil ③ **Shaft-head_guide** with G948P. 4. Insert ⑤ **Shaft-head carriage** in two holes the **Frame-main** and then assemble ⑥ **Ring-e hole (ø3.0)** to ⑤ **Shaft-Head carriage**. 5. Insert FPC-head in ⑦ **Printer-head** and then tighten ⑦ **Printer-head** on **Carriage head ass'y** with two ⑧ **Screw-tapping (M3×10)**. And grease ⑤ **Shaft-head carriage** and the triangle part of **Carriage head ass'y**. 6. Tighten ⑨ **Bracket-head-cover-L** and ⑩ **Bracket-head-cover-R** on **Frame-main** with each of ⑪ **Screw-machine (M2.6×3)**.

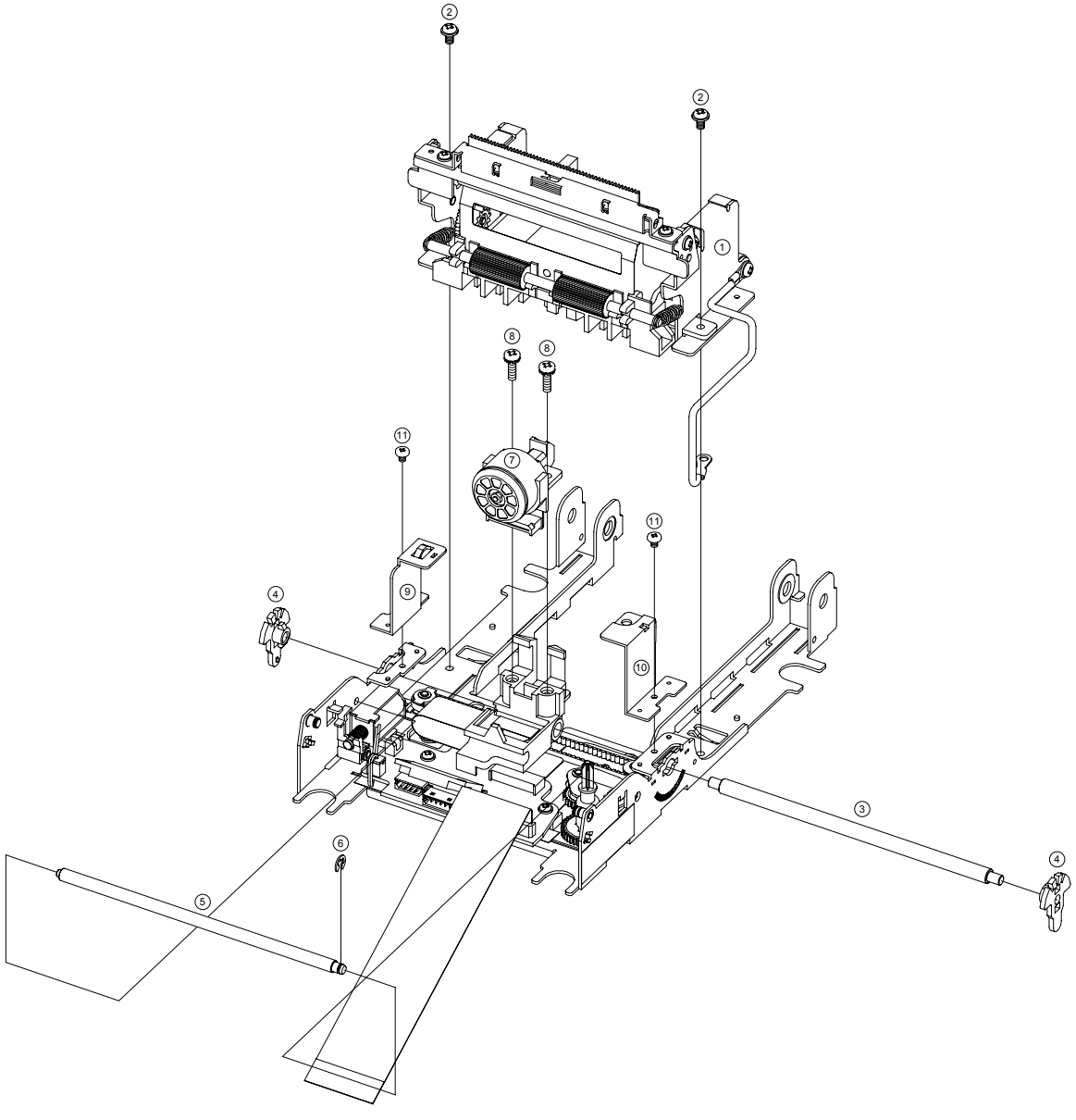

5-2-4 Main-assembly D

Part name	Assembly procedure
① Motor-step (PF motor) ② Spring-ribbon ③ Frame-ribbon ④ Ring-e hole (ø3.0) -2ea. ⑤ Motor-step (HF motor) ⑥ Screw-taptite (M3×4) -4ea. ⑦ Head-cover ass'y	1. Tighten ① **Motor-step** (PF motor) on **Frame-holder basket-L** with two ⑥ **Screw-taptite (M3×4)**. And insert the 4pin connector of ① **Motor-step** (PF motor) to the connector of **PCB-head ass'y**. 2. Attach ② **Spring-ribbon** to the right side of ③ **Frame-ribbon** and then insert ③ **Frame-ribbon** between **Shaft-ribbon frame L** and **Shaft-ribbon frame R**. And fix ② **Spring-ribbon** to the hook of **Frame-main**. 3. Assemble two ④ **Ring-e hole (ø3.0)** to two shafts. 4. Tighten ⑤ **Motor-step** (HF motor) on the bottom of **Frame-main** with two ⑥ **Screw-taptite (M3×4)**. And insert the 6pin connector of ⑤ **Motor-step** (HF motor) to the connector of **PCB-head ass'y**. 5. Tighten ⑦ **Head-cover ass'y** to **Frame-main** with **Screw-manual(M4.0)** of ⑦ **Head-cover ass'y**.

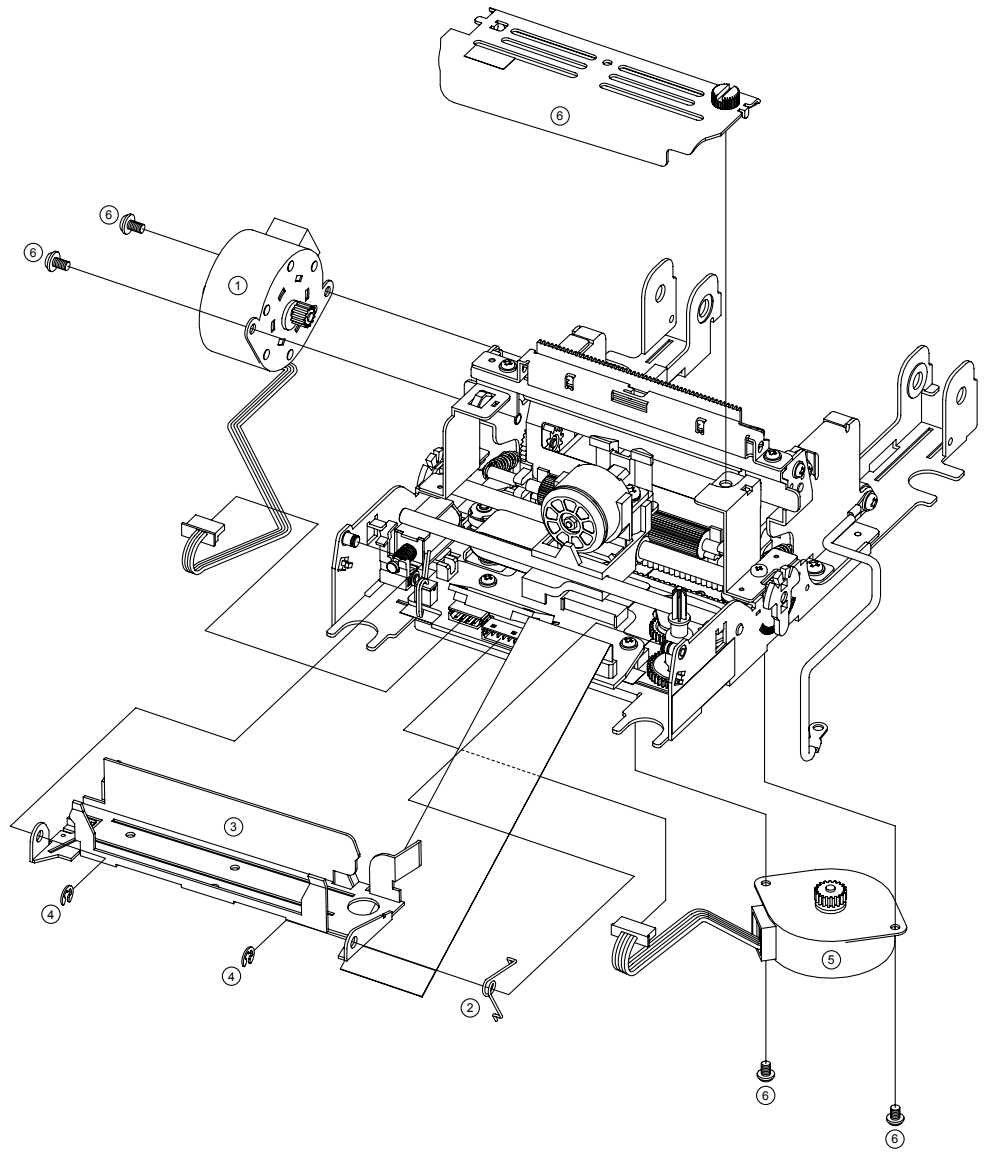

5-2-5 Main-assembly E (for SMP715A type)

Part name	Assembly procedure
① Frame-rotator ass'y ② Shaft-pivot -2ea. ③ Spring-rear open -2ea. ④ Ring-e hole (ø5.0) -2ea. ⑤ Frame-rear cover ⑥ Screw-taptite (M3×5)	1. Attach ① **Frame-rotator ass'y** on **Frame-main** and then insert two ② **Shaft-pivot** and two ③ **Spring-rear open**. And assemble two ④ **Ring-e hole (ø5.0)** to two ② **Shaft-pivot**. 2. Tighten ⑤ **Frame-rear cover** on ① **Frame-rotator ass'y** with ⑥ **Screw-taptite (M3×5)**. 3. Grease two **Shaft-locking**, the hooks of **Frame-clamshell locking** and the groove of **Frame-pivot locking-L/R**.

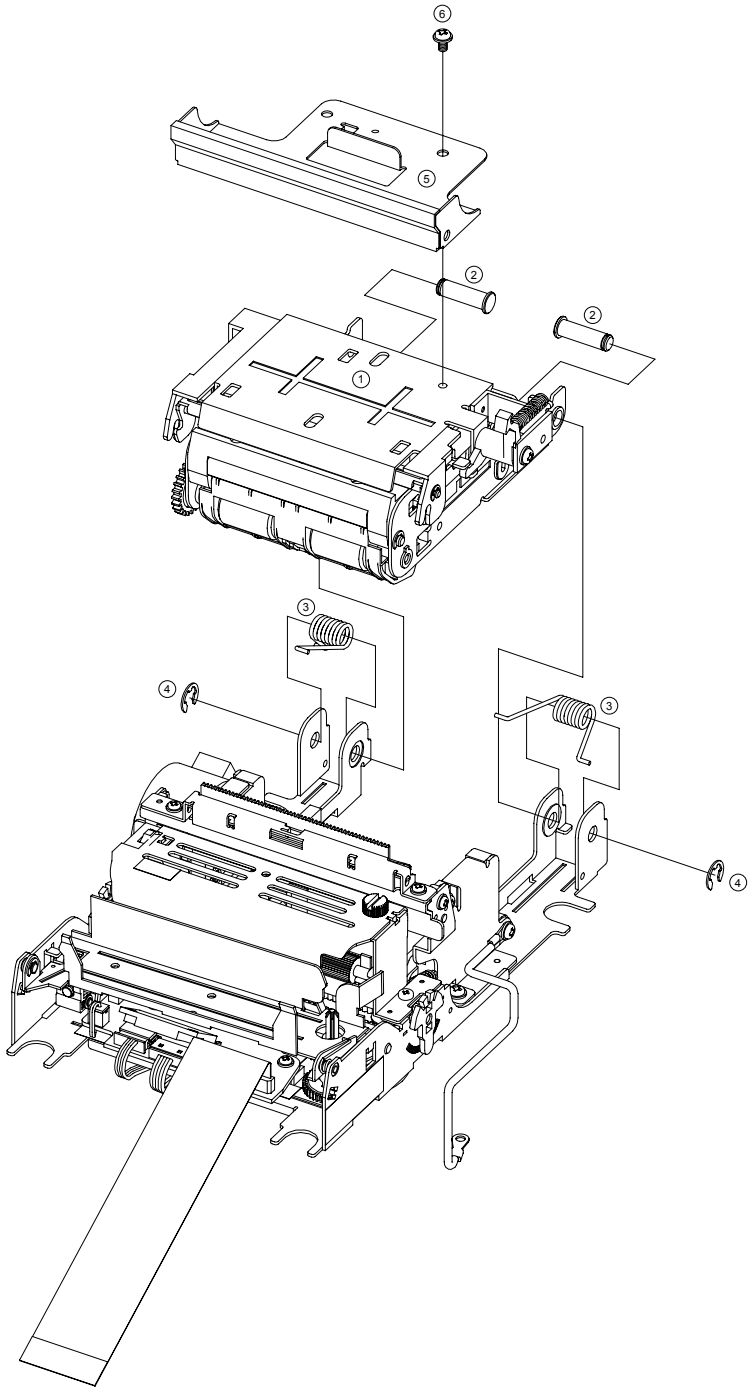

5-2-6 Main-assembly E (for SMP715C type)

Part name	Assembly procedure
① Frame-rotator ass'y ② Shaft-pivot -2ea. ③ Spring-rear open ④ Ring-e hole (ø5.0) -2ea. ⑤ Auto cutter ass'y ⑥ Screw-taptite (M3×5)	1. Attach ① **Frame-rotator ass'y** on **Frame-main** and then insert two ② **Shaft-pivot** and two ③ **Spring-rear open**. And assemble two ④ **Ring-e hole (ø5.0)** to two ② **Shaft-pivot**. 2. Tighten ⑤ **Auto cutter ass'y** on ① **Frame-rotator ass'y** with ⑥ **Screw-taptite (M3×5)**. 3. Grease two **Shaft-locking**, the hooks of **Frame-clamshell locking** and the groove of **Frame-pivot locking-L/R**.

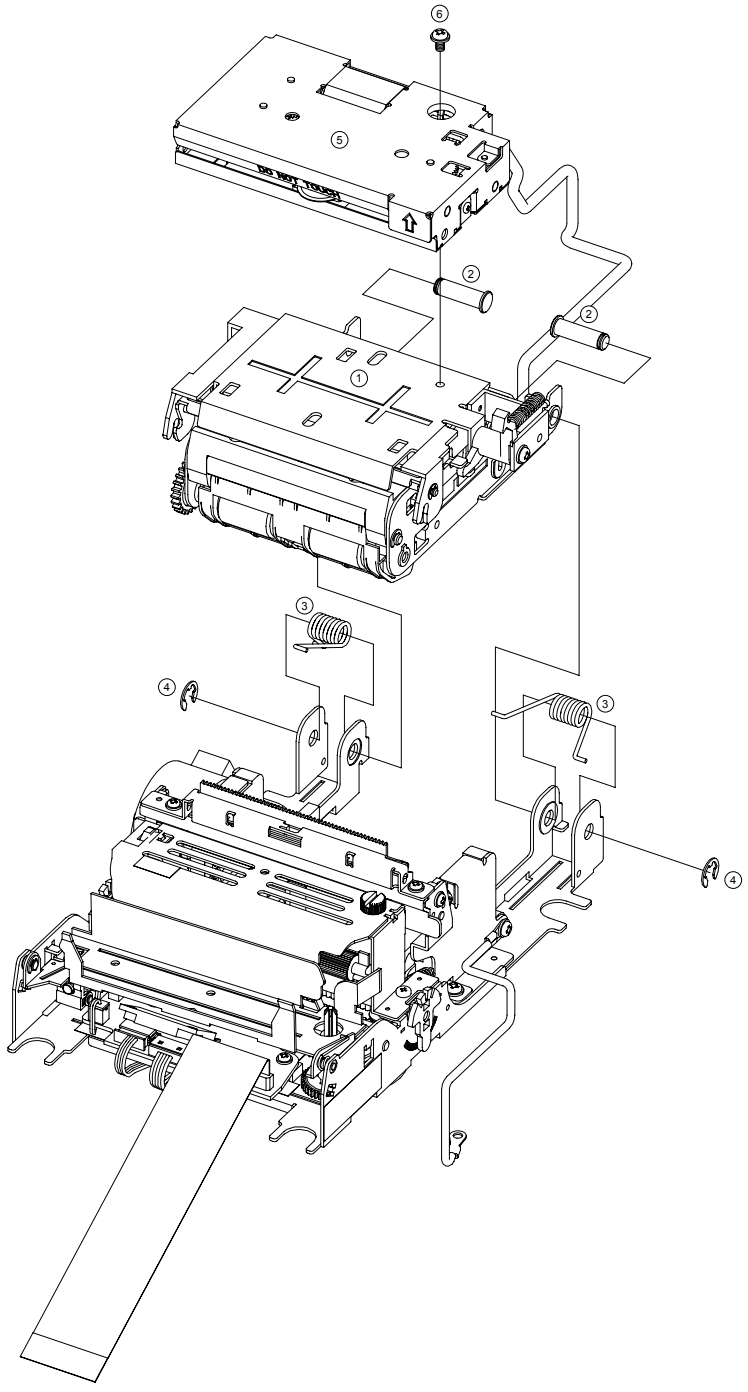

5-3 Auto cutter unit assembly

5-3-1 AC timing belt assy

Part name	Assembly procedure
① Plate-AC belt ② Holder-AC timing belt ③ Power-AC-timing belt	1. Attach ② **Holder-AC timing belt** to ③ **Power-AC-timing belt** and then insert ① **Plate-AC belt** to the hole of ② **Holder-AC timing belt**.

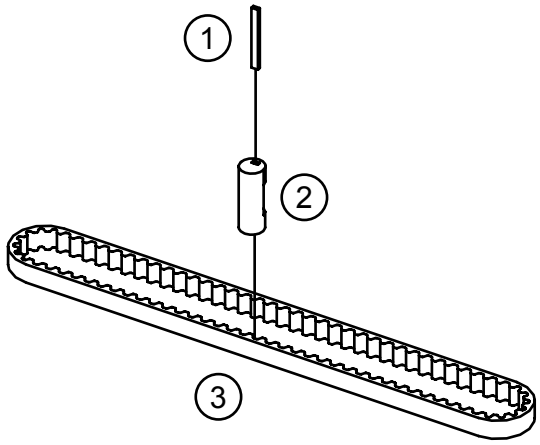

5-3-2 AC upper frame caulking assy

Part name	Assembly procedure
① Frame-AC upper ② Shaft-AC-worm/pulley -3ea.	1. Caulk three ② **Shaft-AC-worm/pulley** on ① **Frame-AC upper**.

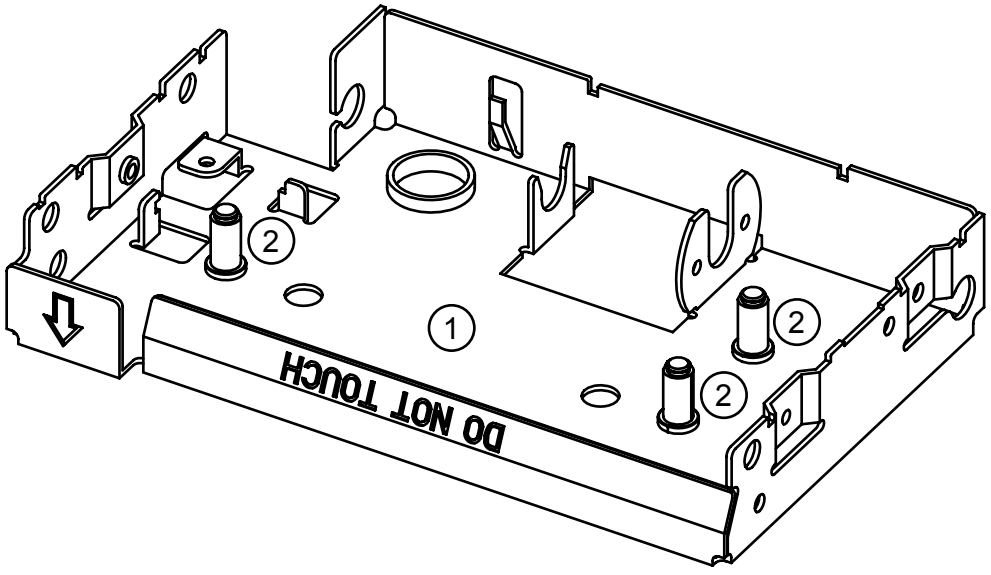

5-3-3 AC upper cutter guide assy

Part name	Assembly procedure
① Guide-AC upper cutter ② Washer-plain (ø2.6) ③ Shaft-AC-upper cutter ④ AC upper cutter ass'y (Sub-assembly 5-3-4) ⑤ Cover-AC plate felt -2ea. ⑥ Felt-AC oil -2ea.	1. Insert ④ **AC upper cutter ass'y** in ① **Guide-AC upper cutter** and then insert ③ **Shaft-AC-upper cutter** into ① **Guide-AC upper cutter**. And assemble ② **Washer-plain (ø2.6)** to ③ **Shaft-AC-upper cutter**. 2. Insert two ⑥ **Felt-AC oil** in ① **Guide-AC upper cutter** and then assemble two ⑤ **Cover-AC plate felt**.

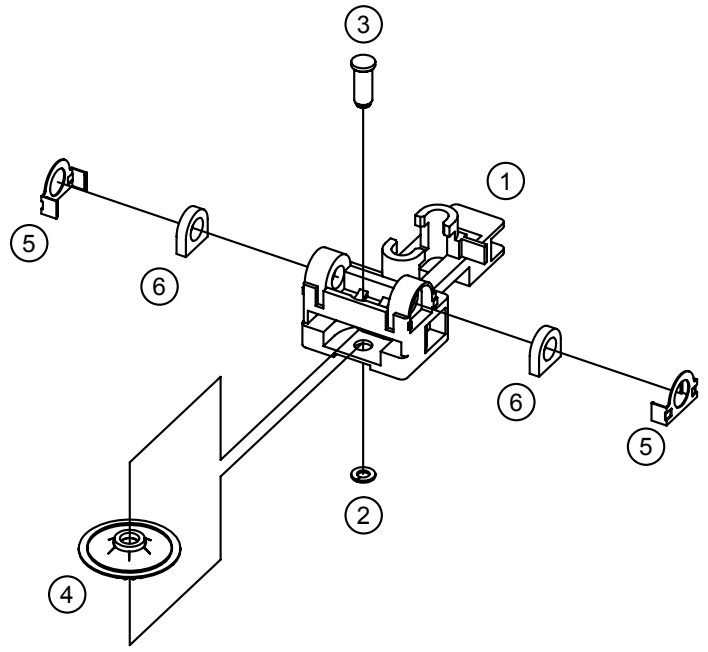

5-3-4 AC upper cutter assy

Part name	Assembly procedure
① Cutter-16.4 ② Gear-AC upper cutter ③ Fastener-ring	1. Attach ① **Cutter-16.4** on ② **Gear-AC upper cutter** and then assemble ③ **Fastener-ring**.

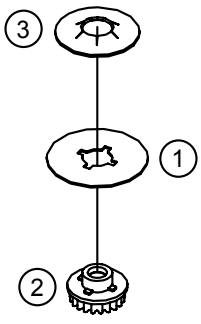

5-3-5 AC motor assy

Part name	Assembly procedure
① AC motor ass'y (Sub-assembly 5-3-6) ② PCB-AC ass'y (Sub-assembly 5-3-7)	1. Attach the wire of ① **AC motor ass'y** to ② **PCB-AC ass'y** and then solder the land on ② **PCB-AC ass'y** bottom side. **<Check point>** After soldering, check the frozen lead and short.

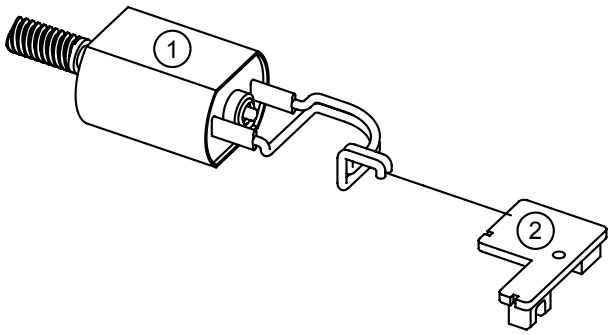

5-3-6 AC motor sub assy

Part name	Assembly procedure
① Motor-DC ② Gear-AC worm	1. Insert ② **Gear-AC worm** to ① **Motor-DC**.

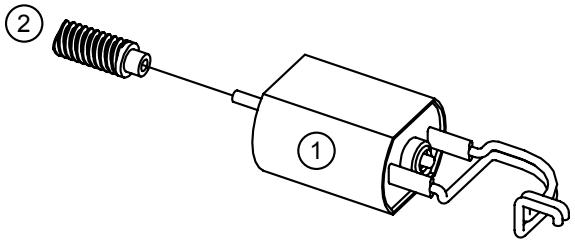

5-3-7 PCB-AC assy

Part name	Assembly procedure
① PCB-AC ② Photo interrupter	1. Attach ② **Photo interrupter** to fit the hole of ① **PCB-AC** and then solder the land on ① **PCB-AC** bottom side. **<Check point>** After soldering, check the frozen lead and short.

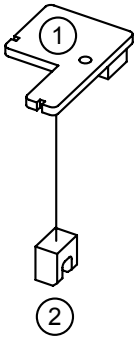

5-3-8 Main assy

Part name	Assembly procedure
① AC timing belt ass'y (Sub-assembly 5-3-1) ② AC upper frame caulking ass'y (Sub-assembly 5-3-2) ③ AC upper cutter guide ass'y (Sub-assembly 5-3-3) ④ AC motor ass'y (Sub-assembly 5-3-5) ⑤ Gear-AC worm wheel ⑥ Gear-AC gear pulley -2ea. ⑦ Shaft-AC-shaft guide -2ea. ⑧ Ring-e hole (ø3.0) -2ea. ⑨ Frame-AC lower ⑩ Screw-taptite -5ea. ⑪ Screw-tapping ⑫ Harness-AC	1. Attach ① **AC timing belt ass'y** to two ⑥ **Gear-AC gear pulley** and then insert two ⑥ **Gear-AC gear pulley** to two **Shaft-AC-worm/pulley** of ② **AC upper frame caulking ass'y**. 2. Insert ⑤ **Gear-AC worm wheel** to **Shaft-AC-worm/pulley** of ② **AC upper frame caulking ass'y**. 3. Assemble ③ **AC upper cutter guide ass'y** to ① **AC timing belt ass'y** and then insert two ⑦ **Shaft-AC-shaft guide** to ③ **AC upper cutter guide ass'y** and four holes ② **AC upper frame caulking ass'y**. And assemble two ⑧ **Ring-e hole (ø3.0)**. 4. Tighten ④ **AC motor ass'y** to ② **AC upper frame caulking ass'y** with ⑩ **Screw-taptite** and ⑪ **Screw-tapping**. 5. Tighten ⑨ **Frame-AC lower** to ② **AC upper frame caulking ass'y** with four ⑩ **Screw-taptite**. 6. Insert ⑫ **Harness-AC** to the connector of ④ **AC motor ass'y**.

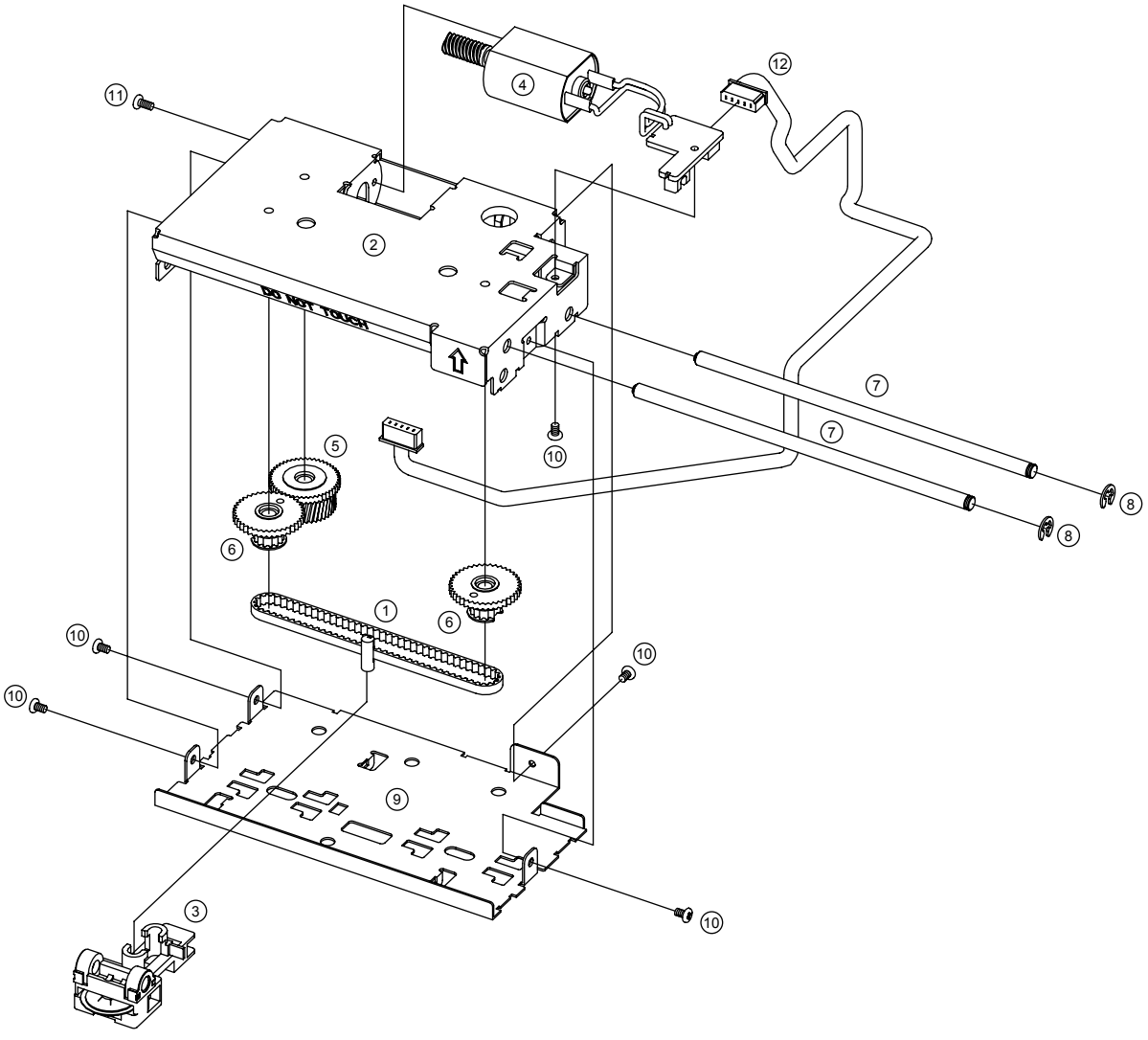

5-4 SRP-275 Whole unit Sub-assembly

5-4-1 Cover base assy

Part name	Assembly procedure
① Cover base ② Frame paper control ③ PMO-roller paper/end -3ea. ④ Switch-paper near end ass'y (Sub-assembly 5-4-2) ⑤ Screw-tapping (M2×5) -2ea. ⑥ PCB-connector sub ass'y ⑦ Screw-taptite (M3×6) -4ea. ⑧ FPC-16pin	1. Attach ② **Frame paper control** to ① **Cover base**. 2. Insert three ③ **PMO-roller paper/end** to ① **Cover base**. 3. Tighten ④ **Switch-paper near end ass'y** to ① **Cover base** with two ⑤ **Screw-tapping (M2×5)**. 4. Tighten ⑥ **PCB-connector sub ass'y** to ① **Cover base** with two ⑦ **Screw-taptite (M3×6)**. 5. Insert ⑧ **FPC-16pin** in ⑥ **PCB-connector sub ass'y**. 6. Insert the connector of ④ **Switch-paper near end ass'y** in connector of ⑥ **PCB-connector sub ass'y**.

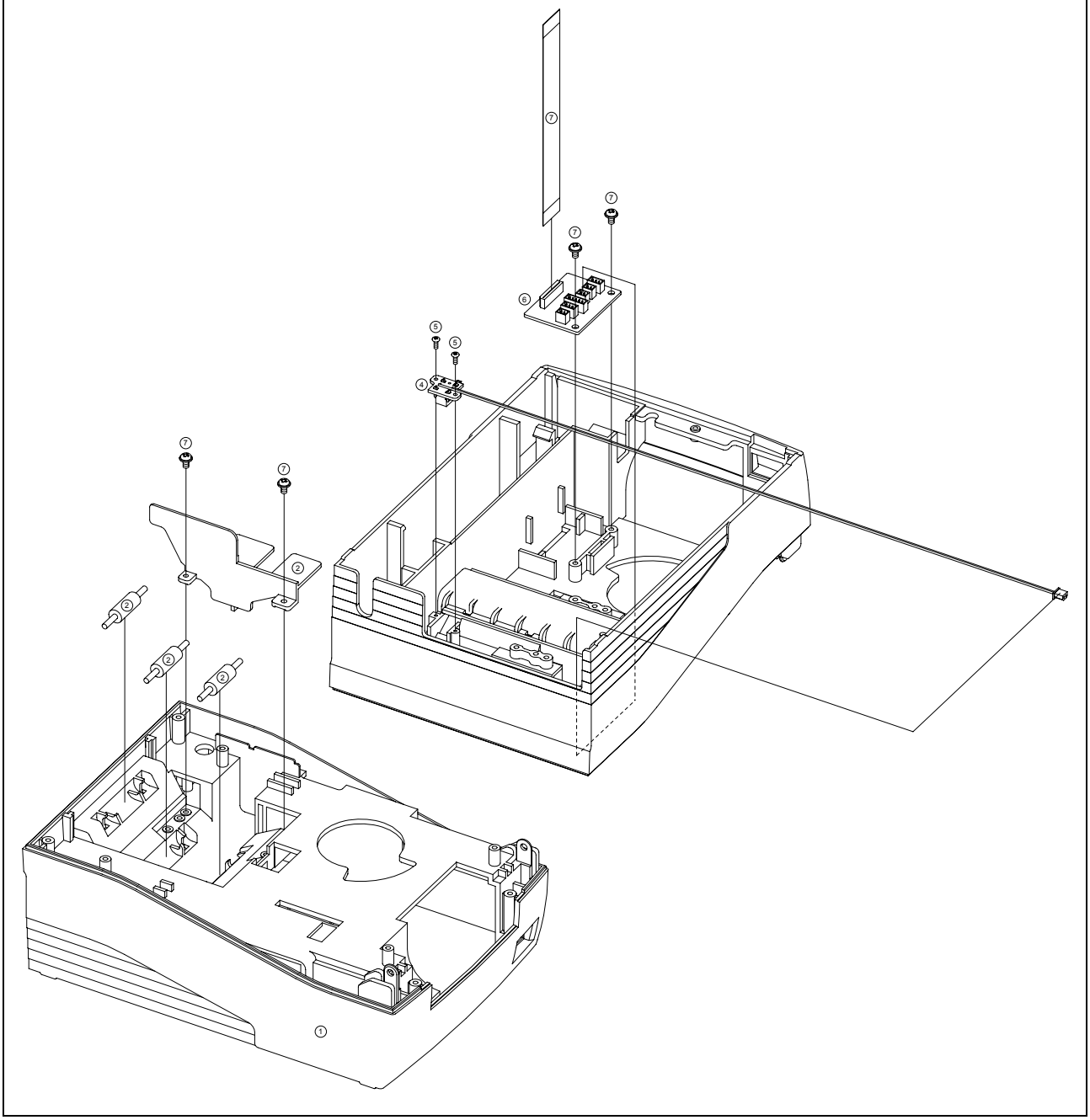

5-4-2 Switch-paper near end assy

Part name	Assembly procedure
① PCB-Switch-paper near end ② Switch-micro (5.9gf) ③ Harness-Switch-paper near end	1. Insert ② **Switch-micro (5.9gf)** to ① **PCB-Switch-paper near end**. 2. Solder the land on ① **PCB-Switch-paper near end** bottom side and attach ③ **Harness-Switch-paper near end** on the land. **<Check point>** After soldering, check the frozen lead and short.

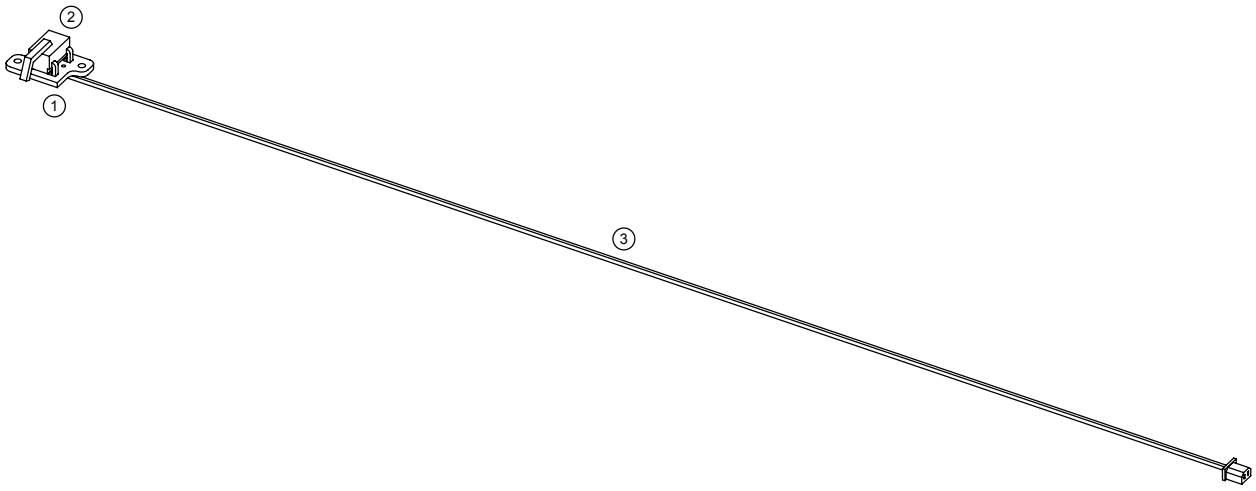

5-4-3 Switch-paper end assy

Part name	Assembly procedure
① PCB-Switch-paper end ② Switch-micro (2.9gf) ③ Harness-Switch-paper end	1. Insert ② **Switch-micro (2.9gf)** to ① **PCB-Switch-paper end**. 2. Solder the land on ① **PCB-Switch-paper end** bottom side and attach ③ **Harness-Switch-paper end** on the land. **<Check point>** After soldering, check the frozen lead and short.

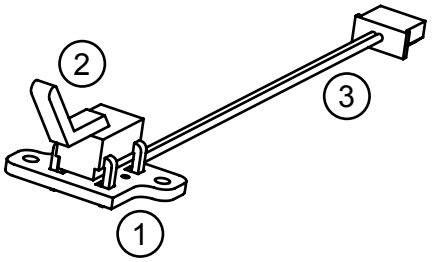

5-4-4 Cover middle assy

Part name	Assembly procedure
① Cover middle ② PMO-roller paper/end ③ Label-logo-SAMSUNG ④ Label-logo-BIXOLON ⑤ Label-operation ⑥ Operation panel ass'y ⑦ Screw-taptite (M3×6) -2ea. ⑧ Switch-cover open ass'y (Sub-assembly C-1) ⑨ Screw-tapping (M2×5) -2ea. ⑩ Switch-paper near end-W ass'y (Sub-assembly C-2) ⑪ Harness (Operation panel)	1. Insert ② **PMO-roller paper/end** to ① **Cover middle**. 2. Paste ③ **Label-logo-SAMSUNG** on the front side of ① **Cover middle**. 3. Paste ④ **Label-logo-BIXOLON** on the back side of ① **Cover middle**. 4. Tighten ⑥ **Operation panel ass'y** to ① **Cover middle** with two ⑦ **Screw-taptite (M3×6)**. 5. Insert ⑪ **Harness (Operation panel)** in ⑥ **Operation panel ass'y**. 6. Tighten ⑧ **Switch-cover open ass'y** to ① **Cover middle** with two ⑨ **Screw-tapping (M2×5)**. 7. Insert ⑩ **Switch-paper near end-W ass'y** to ① **Cover middle**. 8. Align the harness of ⑧ **Switch-cover open ass'y** and ⑩ **Switch-paper near end-W ass'y**.

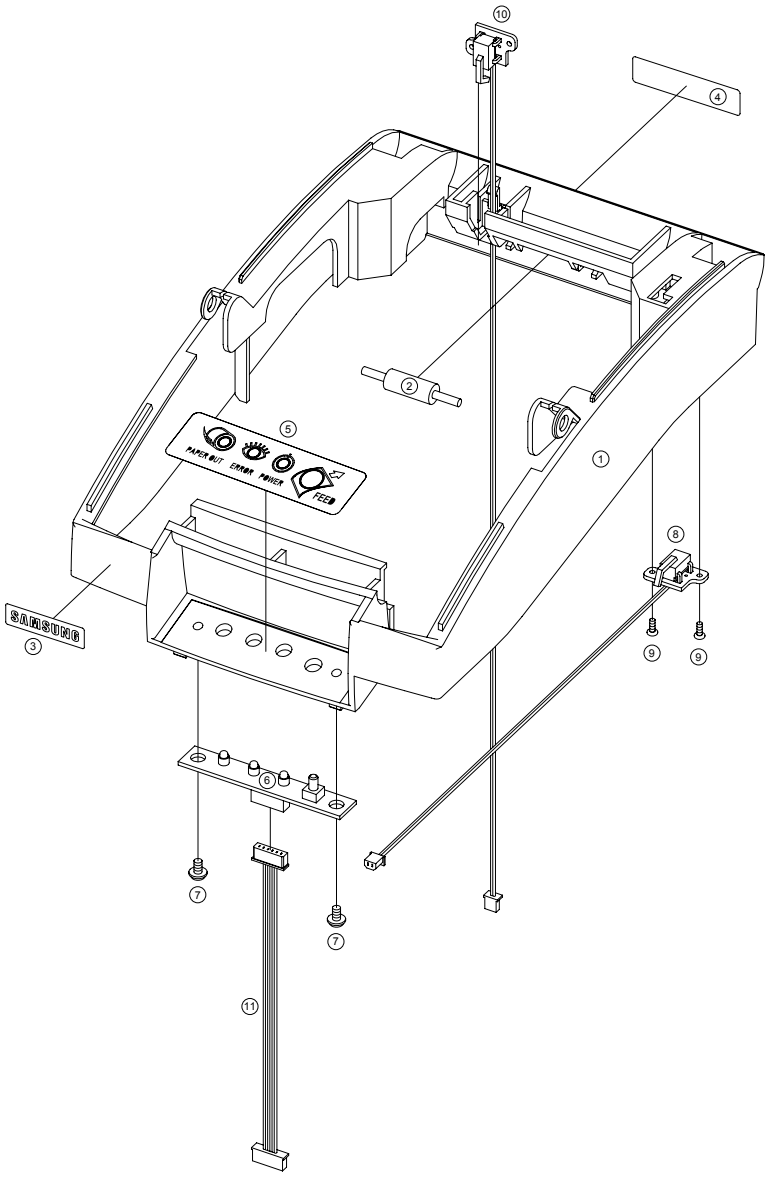

5-4-5 Switch-cover open assy

Part name	Assembly procedure
① PCB-switch-cover open ② Switch-micro (5.9gf) ③ Harness-switch-cover open	1. Insert ② **Switch-micro (5.9gf)** to ① **PCB-Switch-cover open**. 2. Solder the land on ① **PCB-Switch-cover open** bottom side and attach ③ **Harness-Switch-cover open** on the land. **<Check point>** After soldering, check the frozen lead and short.

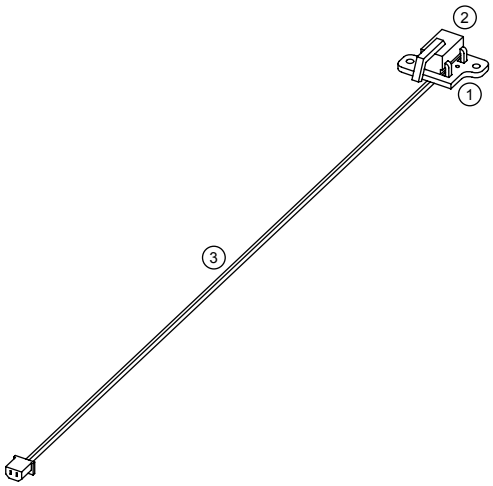

5-4-6 Switch-paper near end -W assy

Part name	Assembly procedure
① PCB-switch-paper near end-W ② Switch-micro (5.9gf) ③ Harness-switch-paper near end	1. Insert ② **Switch-micro (5.9gf)** to ① **PCB-Switch-paper near end-W**. 2. Solder the land on ① **PCB-Switch-paper near end-W** bottom side and attach ③ **Harness-Switch-paper near end-W** on the land. **<Check point>** After soldering, check the frozen lead and short.

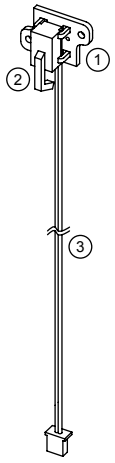

5-4-7 Bracket PCB assy

Part name	Assembly procedure
① Bracket PCB ② PCB-main ass'y ③ Screw-taptite (M3×6) - 3ea. ④ Foot rubber -4ea.	1. Tighten ② **PCB-main ass'y** to ① **Bracket PCB** with three ③ **Screw-taptite (M3×6)**. 2. Paste four ④ **Foot rubber** on ① **Bracket PCB**.

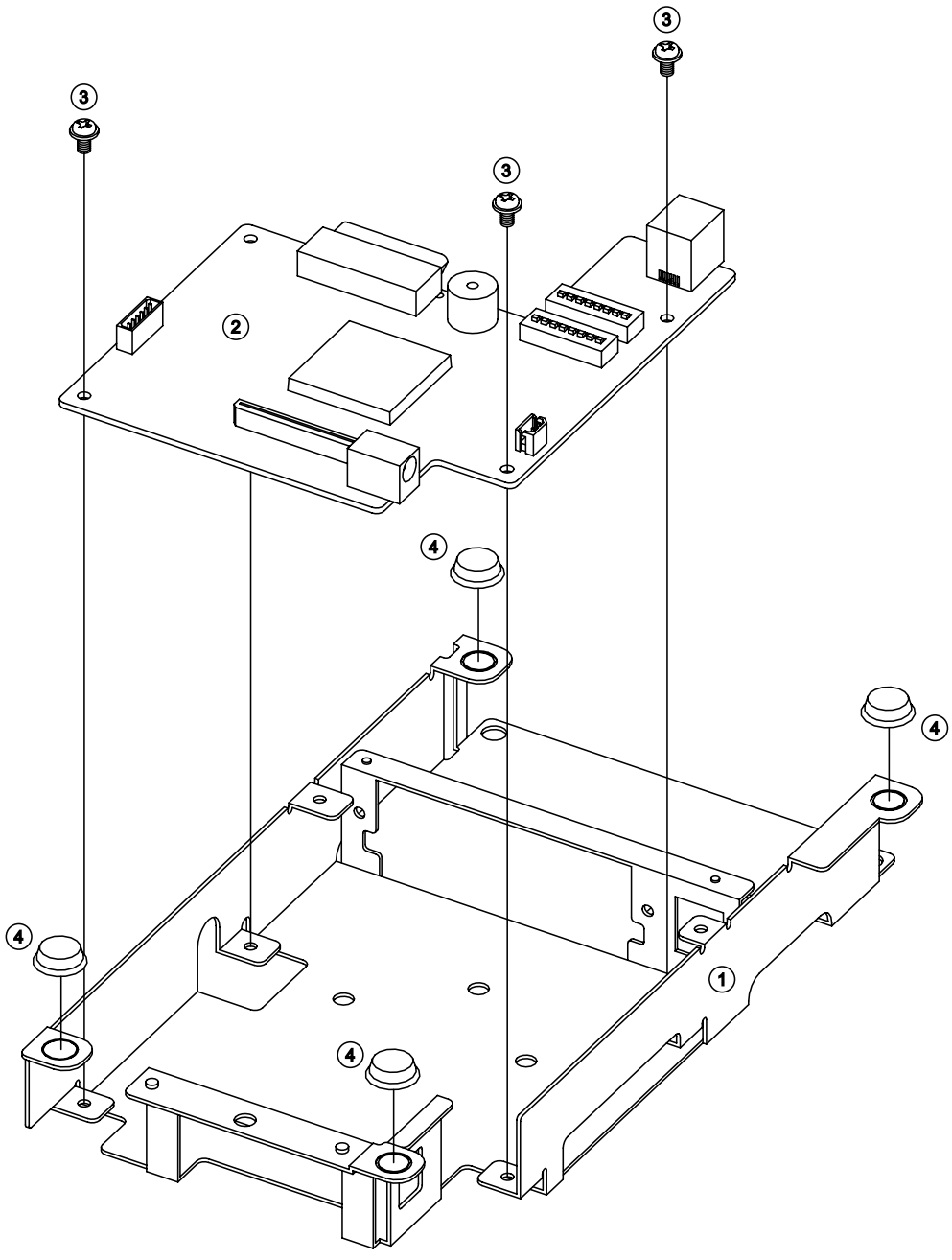

5-4-8 Serial interface assy

Part name	Assembly procedure
① I/F bracket serial ② Serial PCB ass'y ③ Nut-hexagon -2ea.	1. Tighten ② **Serial PCB ass'y** on ① **I/F bracket serial** with two ③ **Nut-hexagon**.

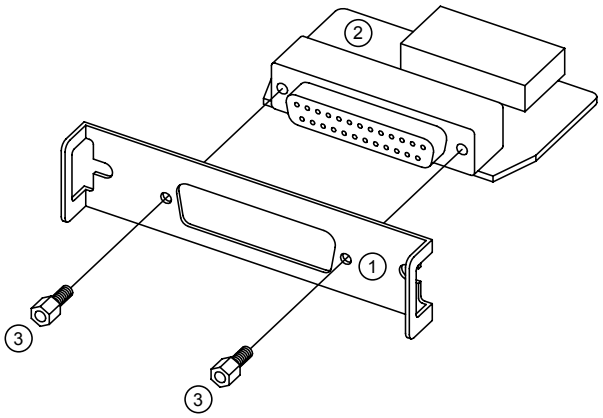

5-4-9 cover front-A assy

Part name	Assembly procedure
① Cover front-A ② Label-warning cover	1. Paste the ② **Label-warning cover** on the inside ① **Cover front-A**. (The SRP-275C type uses **Cover front** instead of ① **Cover front-A**.)

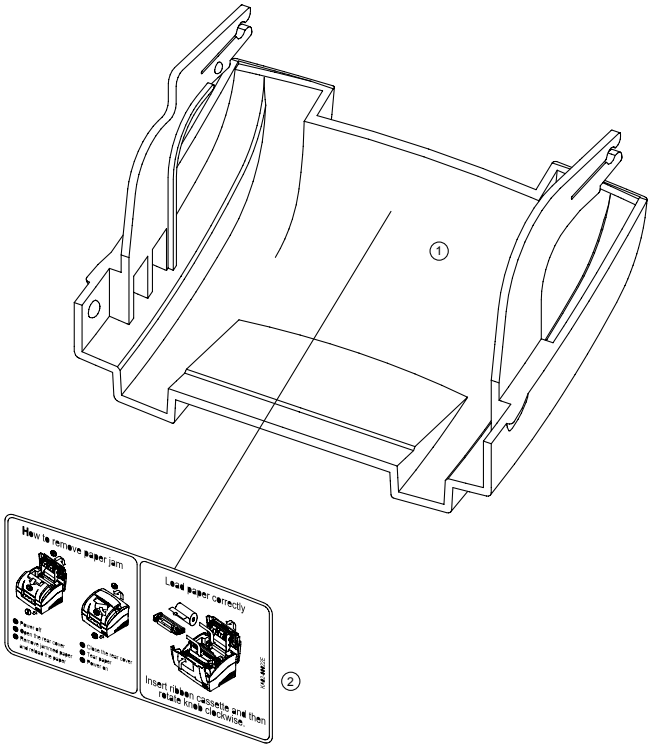

5-5 SRP-275 Whole unit Main-assembly

5-5-1 Main-assembly A (for SRP-275A type)

Part name	Assembly procedure
① SMP715A printer mechanism ass'y ② Rubber-damper ③ Cover base ass'y ④ Screw-taptite (M3×12) -4ea.	1. Insert four ② **Rubber-damper** to a half circle groove of ① **SMP715A printer mechanism ass'y**. 2. Tighten ① **SMP715A printer mechanism ass'y** on the boss of ③ **Cover base ass'y** with four ④ **Screw-taptite (M3×12)**. 3. Insert **Harness-jumper cable** to a square hole of ③ **Cover base**.

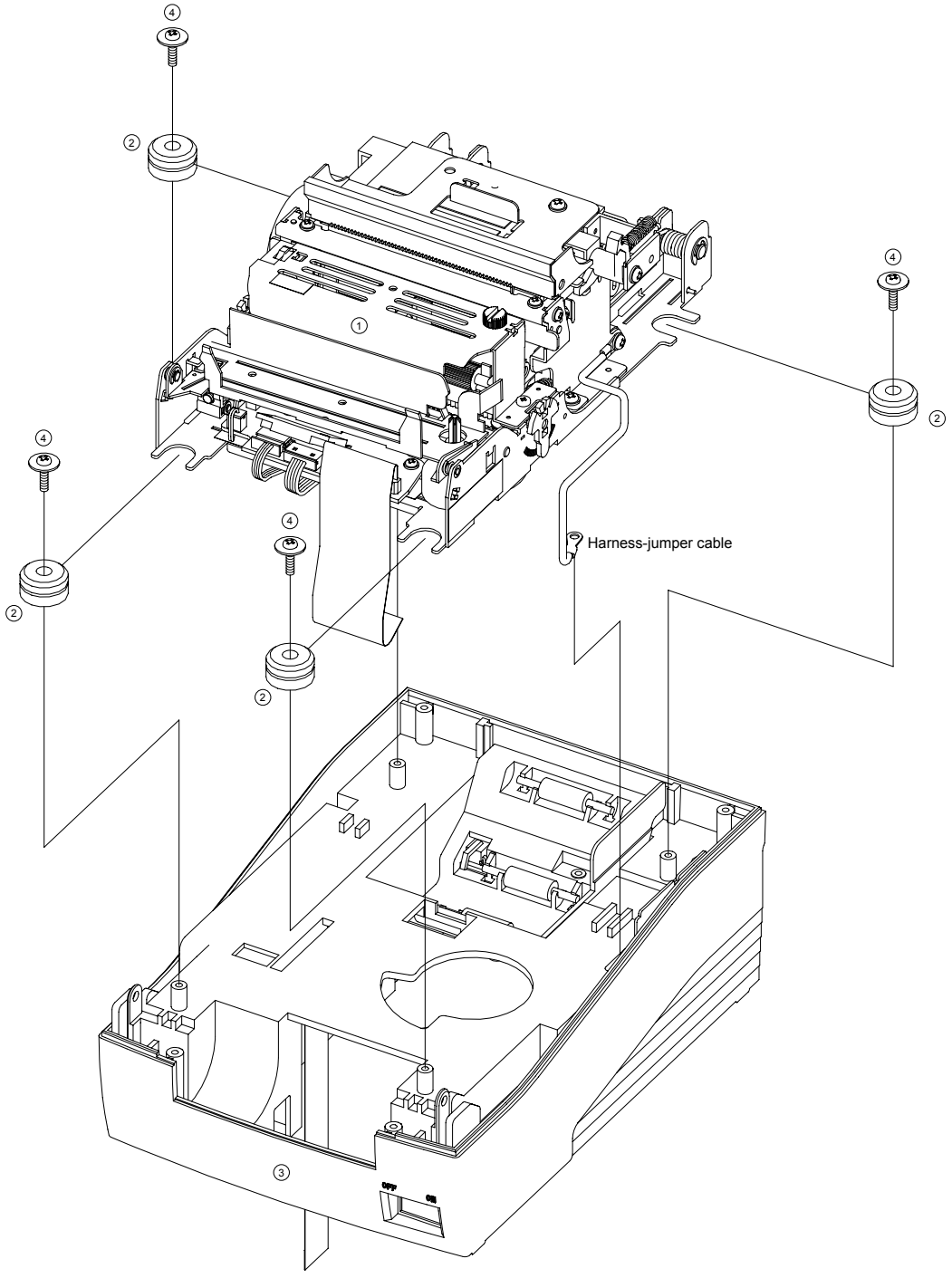

Part name	Assembly procedure
⑤ Switch-paper end ass'y ⑥ Screw-tapping (M2×5) -2ea.	4. Tighten ⑤ **Switch-paper end ass'y** on the bottom of **Frame paper** with two ⑥ **Screw-tapping (M2×5)**.

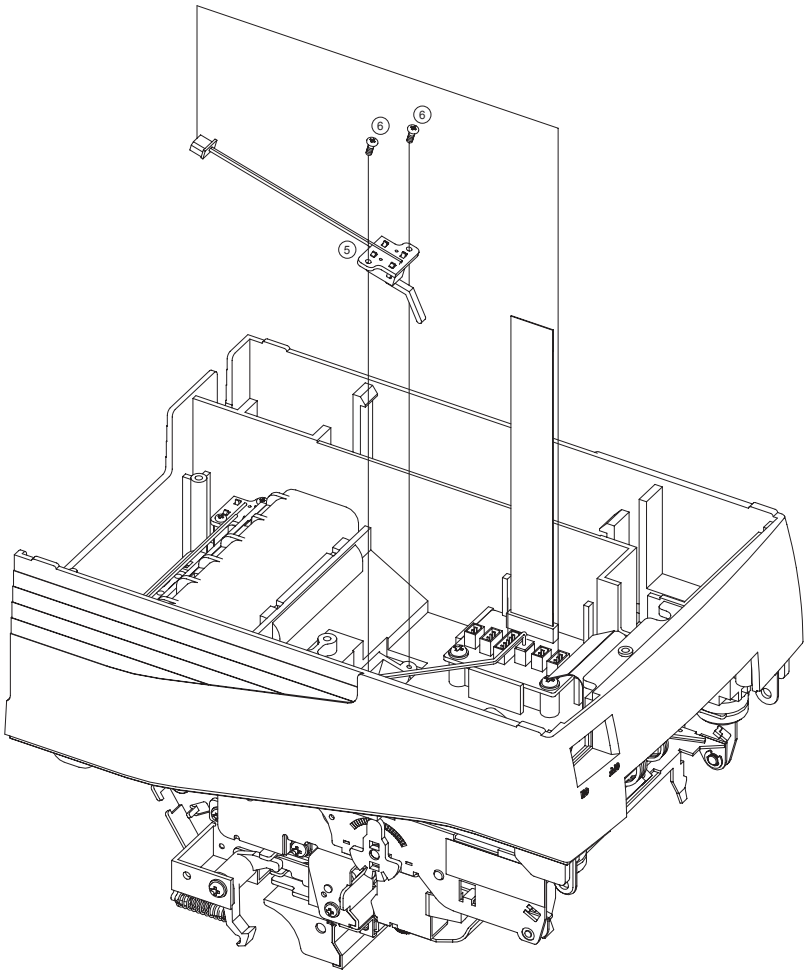

5-5-2 Main-assembly A (for SRP-275C type)

Part name	Assembly procedure
① SMP715C printer mechanism ass'y ② Rubber-damper ③ Cover base ④ Screw-taptite (M3×12) -4ea.	1. Insert four ② **Rubber-damper** to a half circle groove of ① **SMP715C printer mechanism ass'y**. 2. Tighten ① **SMP715C printer mechanism ass'y** on the boss of ③ **Cover base** with four ④ **Screw-taptite (M3×12)**. 3. Insert **Harness-AC** and **Harness-jumper cable** to a square hole of ③ **Cover base**.

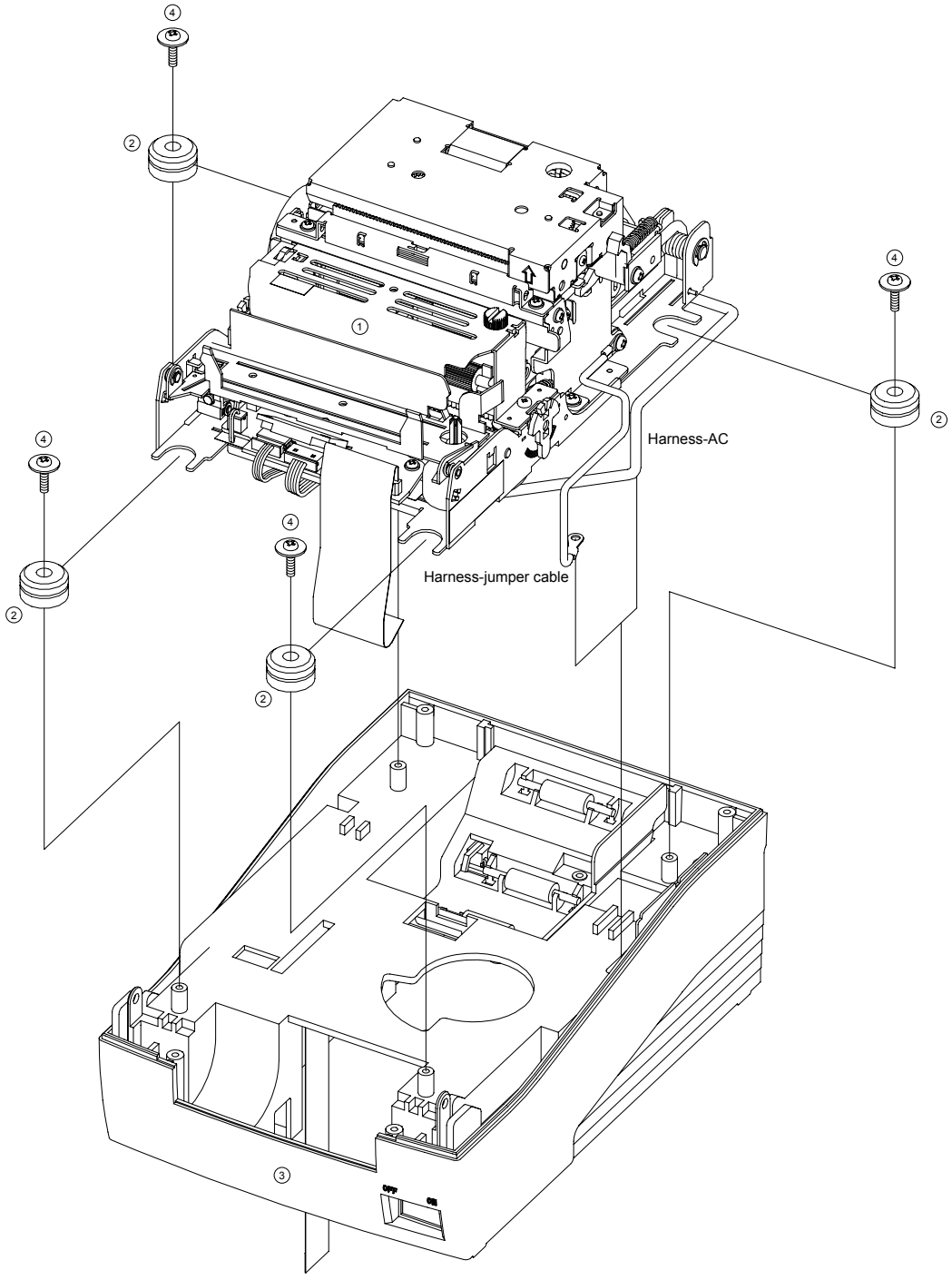

Part name	Assembly procedure
⑤ Switch-paper end ass'y ⑥ Screw-tapping (M2×5) -2ea.	4. Insert the 5pin connector of **Harness-AC** in the connector of **PCB-connector sub ass'y**. 5. Tighten ⑤ **Switch-paper end ass'y** on the bottom of **Frame paper** with two ⑥ **Screw-tapping (M2×5)**.

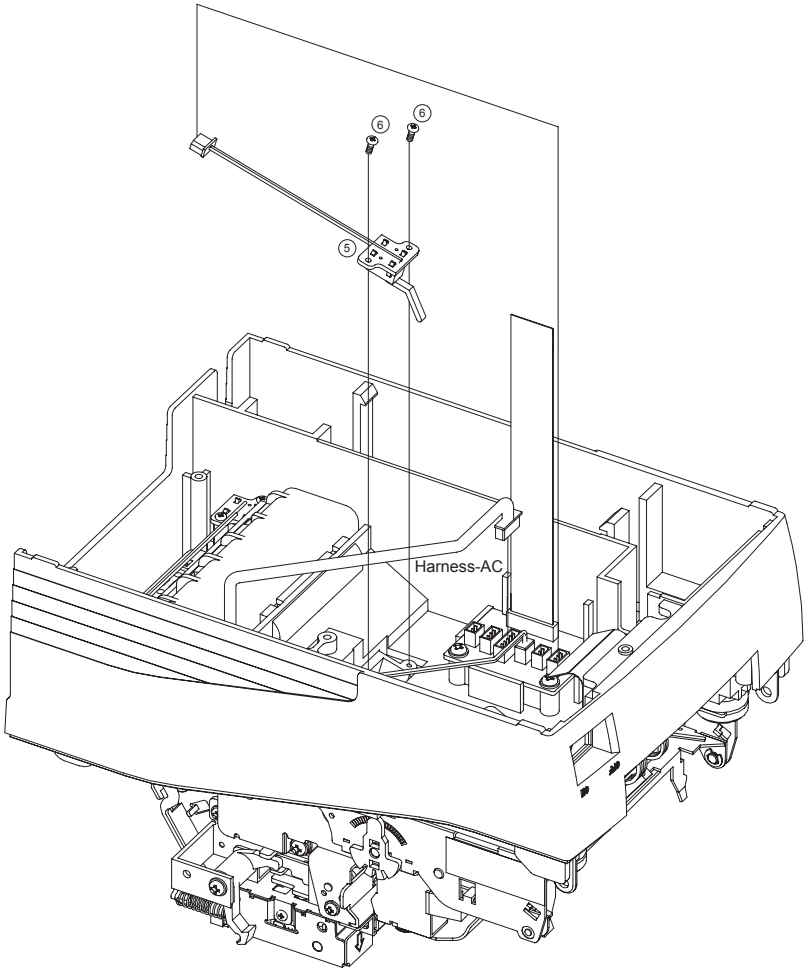

5-5-3 Main-assembly B

Part name	Assembly procedure
① Cover middle ② Screw-taptite (M3×10) -4ea.	1. Tighten ① **Cover middle** on **Cover base** with four ② **Screw-taptite (M3×10)**. 2. Insert **Harness-switch-rear cover open** and **Harness-switch-paper near end-W** to a square hole of **Cover base**.

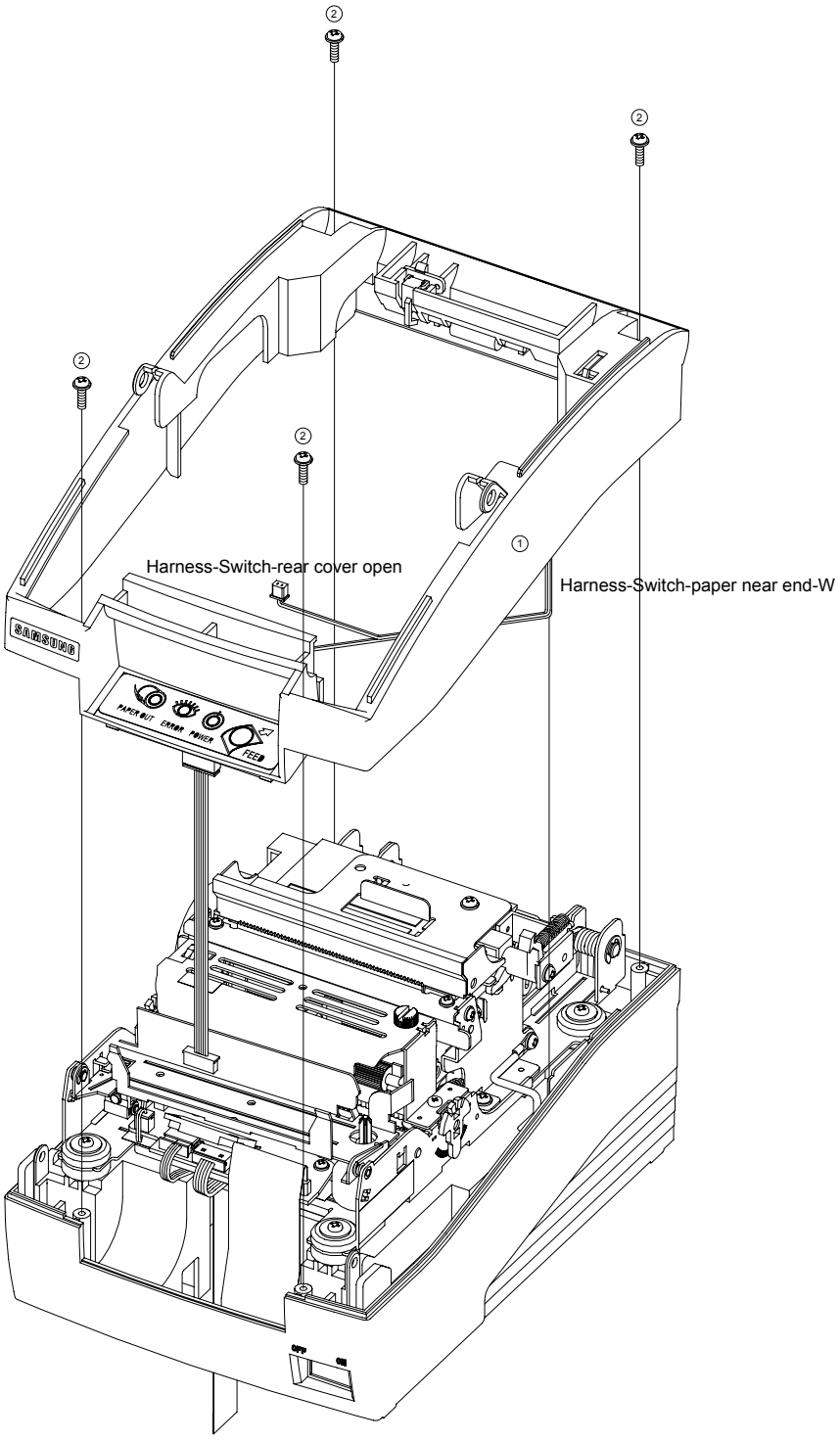

Part name	Assembly procedure
	3. Insert the 2pin connector of **Switch-rear cover open ass'y** and the 2pin connector of **Switch-paper near end-W ass'y** in the connectors of **PCB-connector sub ass'y**.

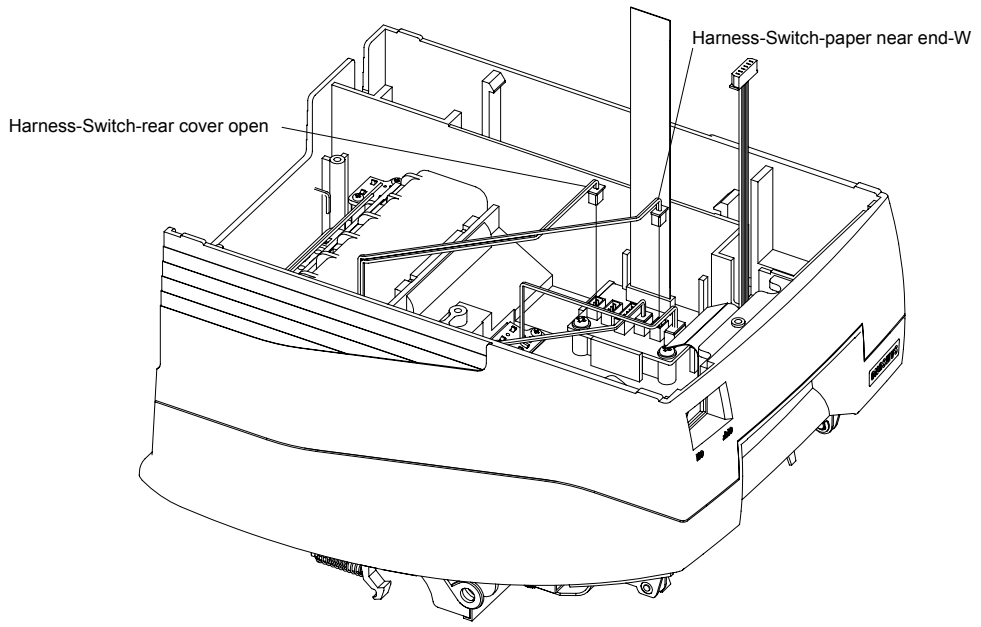

5-5-4 Main-assembly C

Part name	Assembly procedure
① Bracket PCB ass'y (Sub-assembly D) ② Screw-taptite (M3×6) ③ Screw-taptite (M3×10) -3ea. ④ Harness-power	1. Tighten **Harness-jumper cable** to the side hole of ① **Bracket PCB ass'y** with ② **Screw-taptite (M3×6)**. 2. Insert **FPC-connector sub (16pin)** to ① **Bracket PCB ass'y** and then tighten ① **Bracket PCB ass'y** to **Cover base** with three ③ **Screw-taptite (M3×10)**. 3. Insert ④ **Harness-power** into the right front side hole of **Cover base**. 4. Insert the 2pin connector of ④ **Harness-power**, the 6pin connector of **Harness-operation panel** and the 2pin connector of **Harness-power** in three connectors **PCB-main ass'y**.

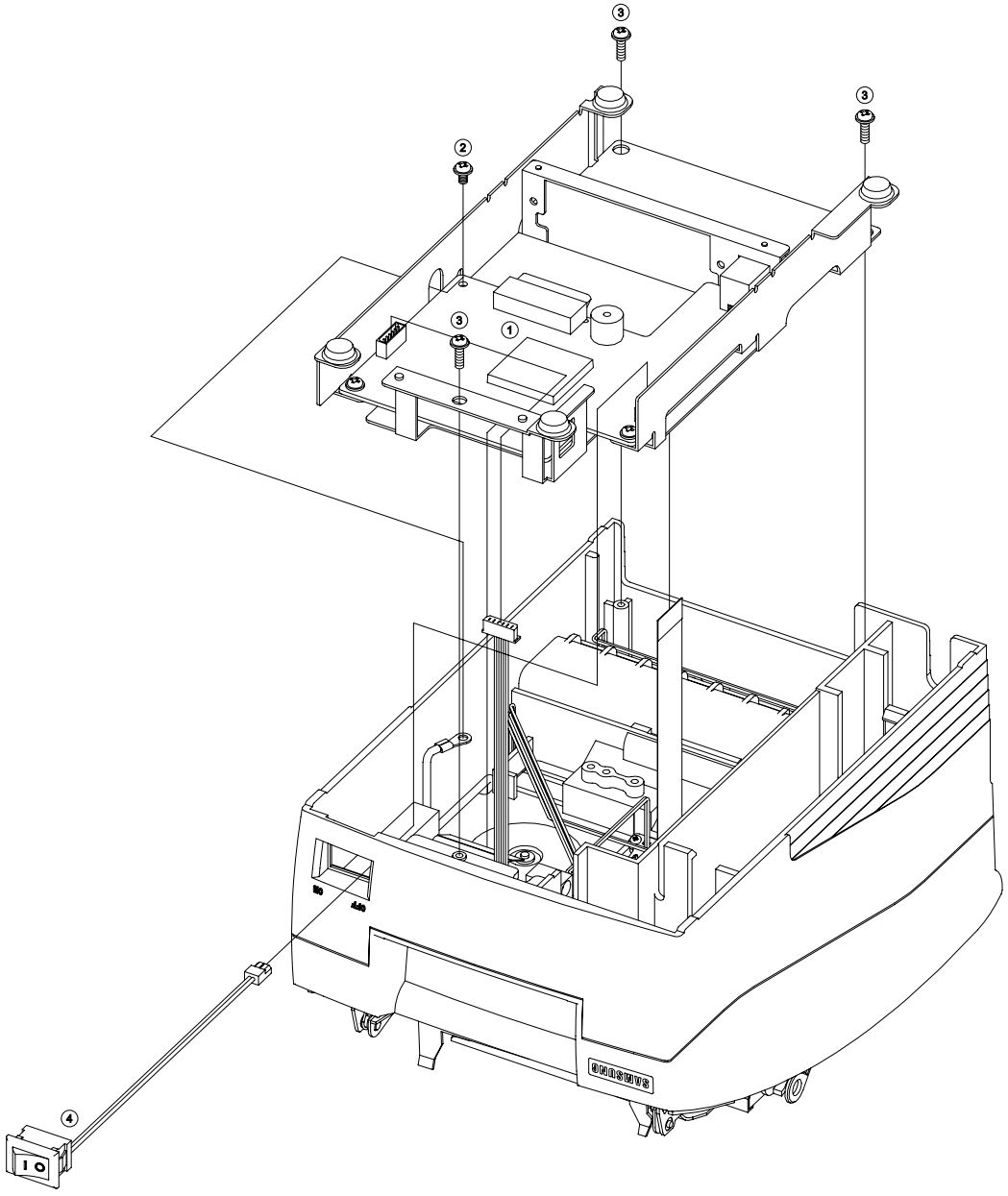

5-5-5 Main-assembly D

Part name	Assembly procedure
① Frame-base ② Frame-cover DIP ③ Serial interface ass'y (Sub-assembly E)	1. Tighten ① **Frame-base** on **Bracket PCB ass'y** with four ⑥ **Screw-taptite (M3×6)**. 2. Tighten ② **Frame-cover DIP** on ① **Frame-base** with ⑥ **Screw-taptite (M3×6)**. 3. Tighten ③ **Serial interface ass'y** to **PCB-main ass'y** with two ⑥ **Screw-taptite (M3×6)**.

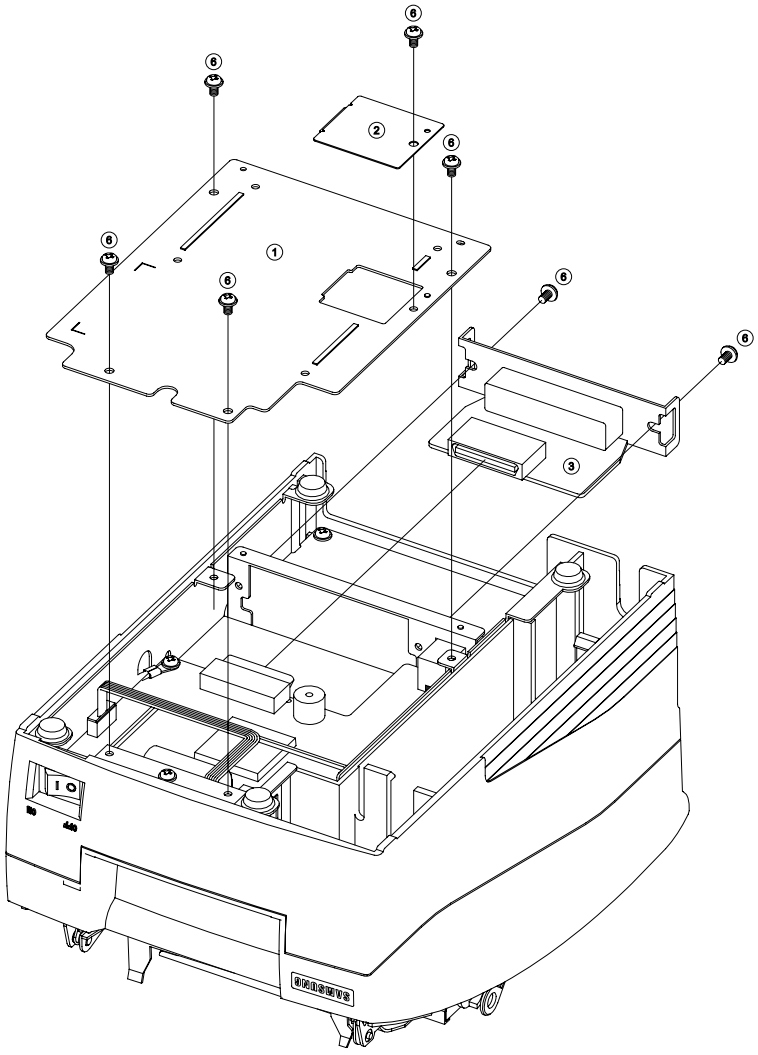

Part name	Assembly procedure
④ Button open ⑤ Cover rear ⑥ Screw-taptite (M3×6) -9ea ⑦ Cover front-A ass'y (Sub-assembly F) ⑧ Label-logo-BIXOLON ⑨ Label-rating	4. Insert ④ **Button open** to ⑤ **Cover rear** and then tighten ⑤ **Cover rear** on **Frame-rotator ass'y** with two ⑥ **Screw-taptite (M3×6)**. 5. Assemble ⑦ **Cover front-A ass'y** to **Cover base**. (The SRP-275C type uses **Cover front ass'y** instead of ⑦ **Cover front-A ass'y**.) 6. Paste ⑦ **Label-logo-BIXOLON** on the center of ⑦ **Cover front-A ass'y**. 7. Paste ⑨ **Label-rating** on ① **Frame-base**.

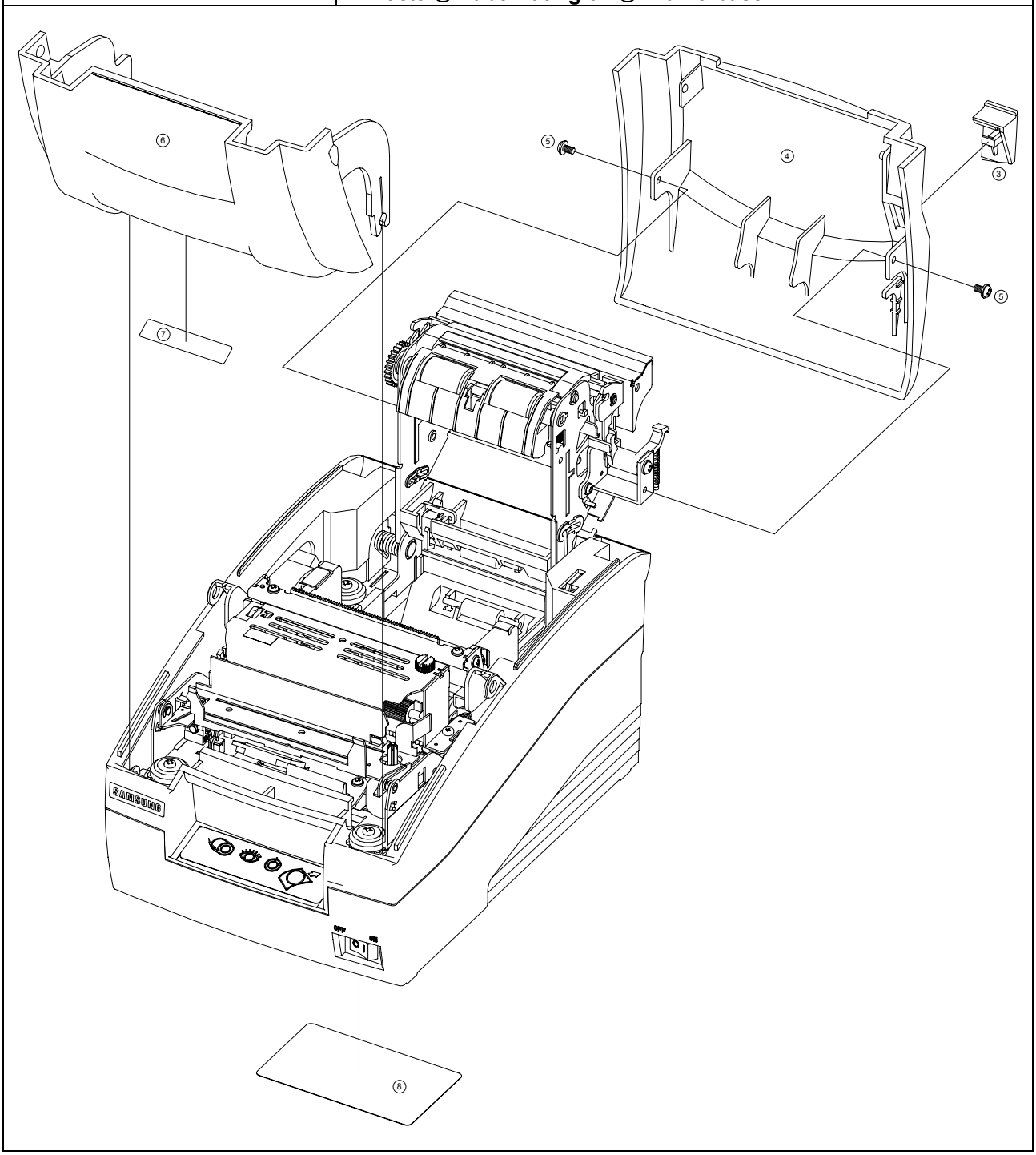

6. Adjustments and Maintenance

6-1 Adjustment

When assembling this printer, be sure to refer to the required adjustment procedure. To ensure normal operation of the printer after disassembly or replacement of a Component for maintenance or repair. Be sure to perform along to the required method.

6-1-1 Adjustment of Head gap

Adjustment step and description points	In Adjustment
1) Move the **Printer-head** to L side. 2) Insert the thickness gauge between **Printer-head** and platen, then rotate the **AD-lever L** and adjust the gap.	Appropriate gap: 0.40~0.50mm
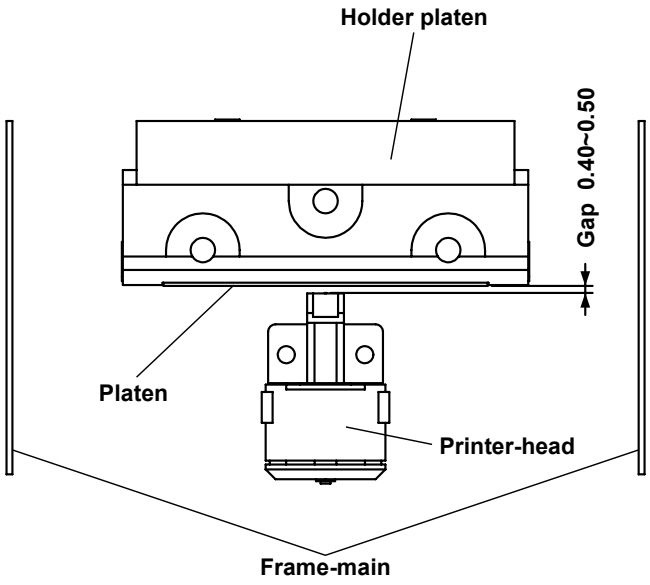	In order to make the gap narrow (wide), turn **AD-lever** to mark '-(+)'
3) Move the **Printer-head** then check if the proper gap from R side center has been achieved. 4) If head gap is not proper, adjust head gap by rotating **AD-lever R**.	If gap is not correct, repeat once more.

6-1-2 Replacement of Printer-head

Follow below steps for replacing **Printer-head**.

1) Loosen the **Frame-ribbon.**
2) Disassemble the **Printer-head** from the **Carriage head ass'y** and take out the **FPC-head** from the connector of PCB ass'y.
3) Replace the **Printer-head** and assemble, according to the order of **Sub-assembly E**.
4) After assembling, adjust the gap as above "Adjustment" indicates.
5) Assemble the **Frame-ribbon**.

6-2 Maintenance

To ensure the maintenance of this printer at its initial performance level throughout a long product life as well as preventing potential troubles, be sure to perform maintenance and management according to the points described in the following subsections.

6-2-1 Cleaning

• Eliminating dirt or strains

- Wipe off the soiled sections using alcohol or benzene.
- Eliminating dust, scraps, and other foreign particles.
- Use a vacuum cleaner to carefully draw out all foreign particles from every part of the printer.

NOTES

• Never use thinner, tricholyene nor ketone solvents as such use may deteriorate or damage the plastic parts.
• Check the lubricant each cleaned section and perform remaining lubrication as required.
(See subsection 4.2.3, "Lubrication points")

6-2-2 Inspection

The maintenance and check-up procedures for this printer are grouped into two types.

1) Daily checks that can be easily performed by the operator of the printer during the course of daily work.
2) Periodic checks that can be performed only by persons having a through understanding of the printer mechanisms. These maintenance and check procedures should be implemented according to the technical level of the person conducting them.

• Daily check

The printer and printer operation are checked to see if the printer is being operated in the proper manner and always being maintained in optimum condition. If any unsatisfactory points are discovered. They should be replaced.

1) Check that the Ribbon Cassette is securely installed properly.
2) Check that the Ribbon Cassette in use conforms to the SPECIFICATIONS. (RRC-275 or compatible)
3) Check the ribbon for bending, twisting or damage. Replace the Ribbon Cassette if it is affecting print quality.
4) Check that the paper in use conforms to that described in the SPECIFICATIONS.

• Periodic check

After every 6 months, the printer parts should be checked for wear. cleanliness, deformation, remaining lubrication, installation status, etc, If any unsatisfactory points are discovered, they should be replaced.

1) Check the printer interior for adhesion of paper dust, scraps and other foreign particles, or clean out any adhered particles with a vacuum cleaner (paying special attention to dirt in the vicinity of the detectors.)
2) Check all the springs for deformation, or replacing any deformed springs.
3) Check the gap between **Head unit** and **Holder platen ass`y**. If there is a malfunction, perform repair according to "4.4 Adjustment".
4) Check the lubricant and adhesive status of all applications points, applying lubricant or adhesive as required according to "4.2 Lubricants and Adhesive Application"
5) Check if printing. paper feeding. ribbon feeding and ribbon shifting are normal. If not, perform repair according to "Chapter 5 Troubleshooting".
6) Observe all of the functions and check for malfunctions due to wear or deformation of parts, paper jam. etc. If there is a malfunction, perform repair according to "Chapter 5 Troubleshooting".

6-3 Lubricants and adhesive application

Lubrication and application adhesive plays an important role in maintaining this printer at its initial performance level, throughout a long product life as well as preventing potential troubles. Make sure to apply the specified lubricants or adhesive in the appropriate amounts at the specified intervals .

6-3-1 Lubricant requirements

Before applying the lubricants during an assembly or disassembly procedure, be sure to first thoroughly clean the part to be lubricated. For details on lubrication see "4.2.3 Lubrication points" and "4.2.2 Lubricant types".

• Lubrication Classes
Concerning the lubrication interval, lubrication should be performed periodically according to the lubrication classes described below. If lubrication becomes deficient due to cleaning, disassembly or parts replacement, be sure to lubricate the required part regardless of the lubrication interval.
- A : Lubrication every 6 months.
- B : Lubrication after on overhaul or every 1 million lines

6-3-2 Lubricant types

The type of oil used greatly influences performance and durability, and special attention is required to its low temperature characteristic. Consequently, the oils to be used with this printer are specified by us on the basis of the result of the thorough analyses of technical data for many types of oils and various experiments. 2 types of oils to be used with this printer are:HG-31S, G 948P

6-3-3 Lubrication points

No	Lubrication point	Oil type
1	Outer periphery of shaft hold roller	HG-31S
2	Contact point between cam of head carriage and ribbon frame	HG-31S
3	Contact point between shaft ribbon frame and lever color change	HG-31S
4	Contact point between spring ribbon feeder and ribbon feeder	HG-31S
5	Outer periphery of shaft head carriage	G948P
6	Outer periphery of all gears	HG-31S
7	Outer periphery of shaft head guide	HG-31S

• Precautions on lubrication
Never apply lubricant to Gear Ratchet or outer periphery of Rubber Roller. If lubricant has accidentally been applied to these parts, clean them with alcohol.

6-3-4 Adhesive application requirements

To prevent from screws getting loose by various vibration while transporting the printer, adhesive should be applied after tightening screws. When performing disassembly or parts replacement, be sure to apply adhesive according to "4.2.6 Adhesive application points".

6-3-5 Adhesive types

The adhesive type for use with this printer : Screwlock

6-3-6 Adhesive application points

No	Adhesive application point	Adhesive Type
12	Volume resistance adjustment of main PCB	Screwlock

6-4 Tools, lubricants and adhesives

6-4-1 List of tools

No	Tool designation	Availability
1	Brush #1	○
2	Brush #2	○
3	Cleaning brush	○
4	Screwdriver (+) No.2	○
5	Tweezers	○
6	Round pliers	○
7	Diagonal cutting nipper	○
8	Electric Soldering iron	○
9	Thickness gauge	○
10	ET holder #2.5	○
11	ET holder #3	○

6-4-2 List of lubricants and adhesives

Item	Oil	Grease	Adhesive
Description	CALTEX REGAL R/D #68, 948P	HG-31S	Screwlock

7. Troubleshooting

Use the following to troubleshoot and repair the printer:

• **Troubleshooting flow chart**
When the source of the problem is not clear, use the flowchart to find and replace a defective component.

• **Troubleshooting tables**
Follow the steps outlined in these tables to repair a defect whose symptoms are known.

7-1 Troubleshooting flow chart

If the source of a problem is not clear, use the flowchart below to find and replace a defective component. Normally, servicing should be performed by component replacement. Repairs of the PCBs and other components should be performed only by technicians.

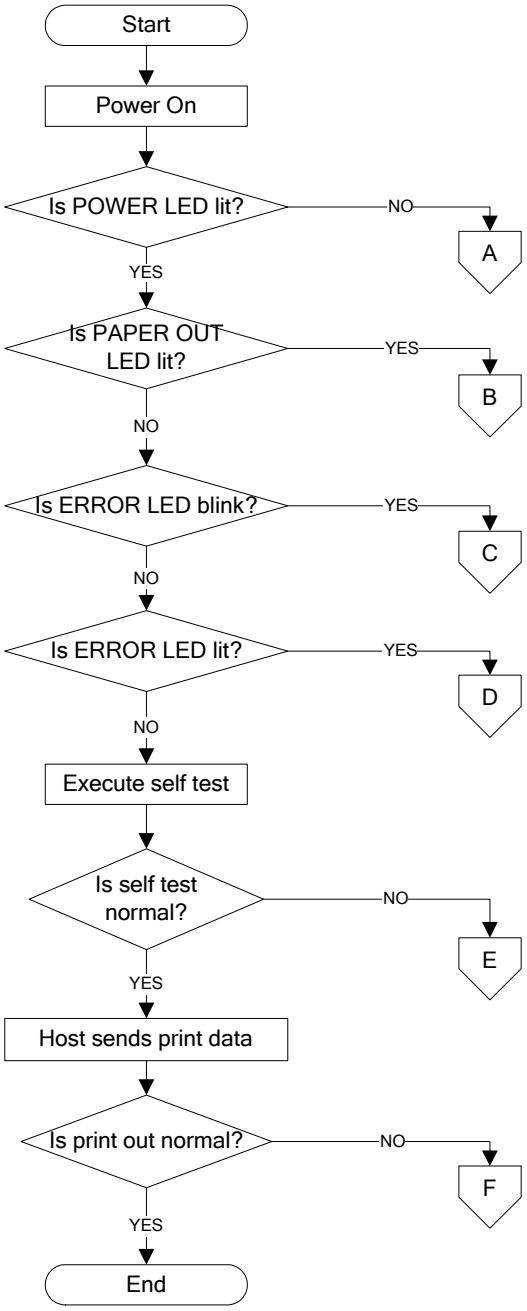

A. POWER LED does not light

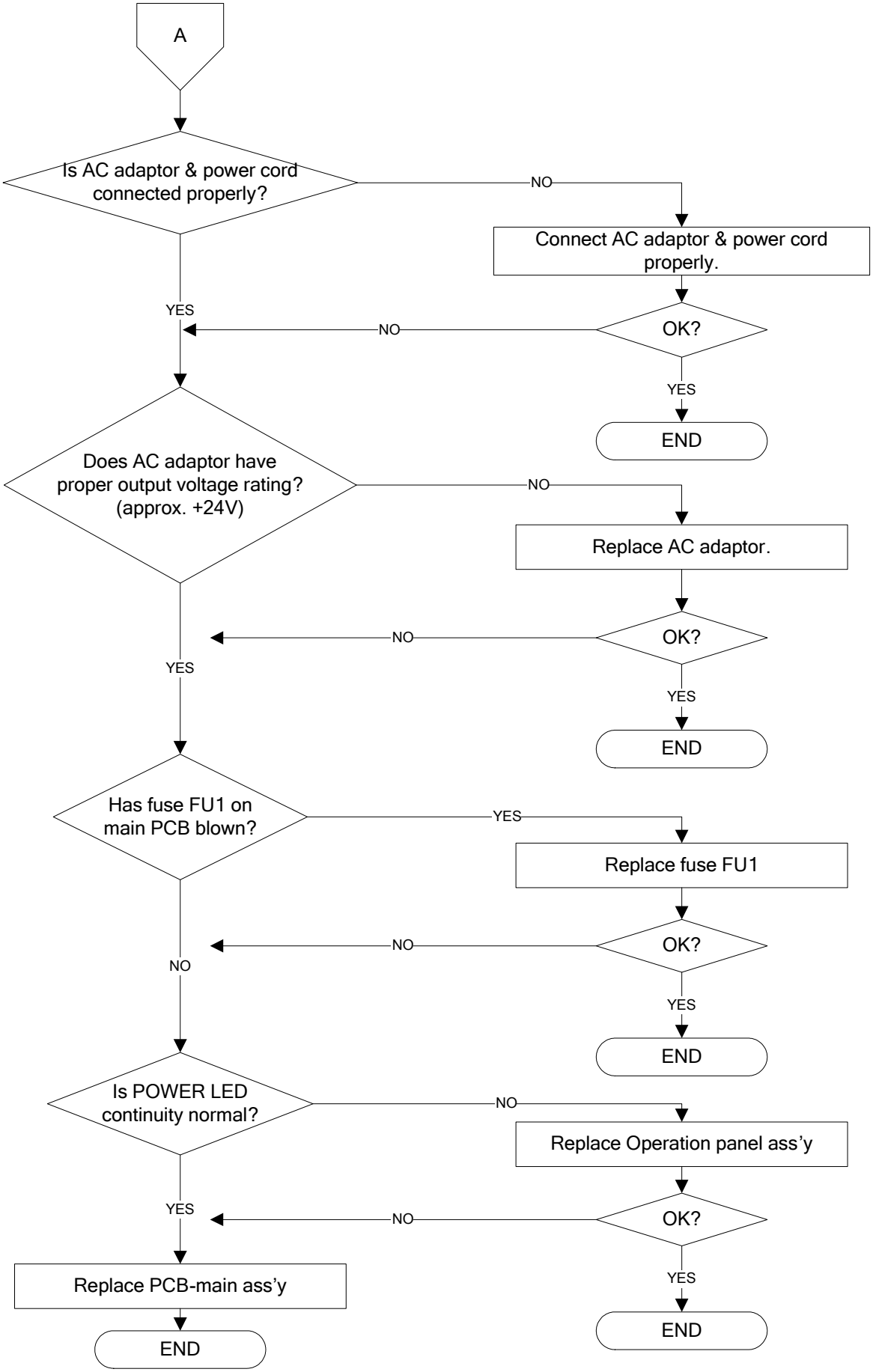

B. PAPER LED is lit

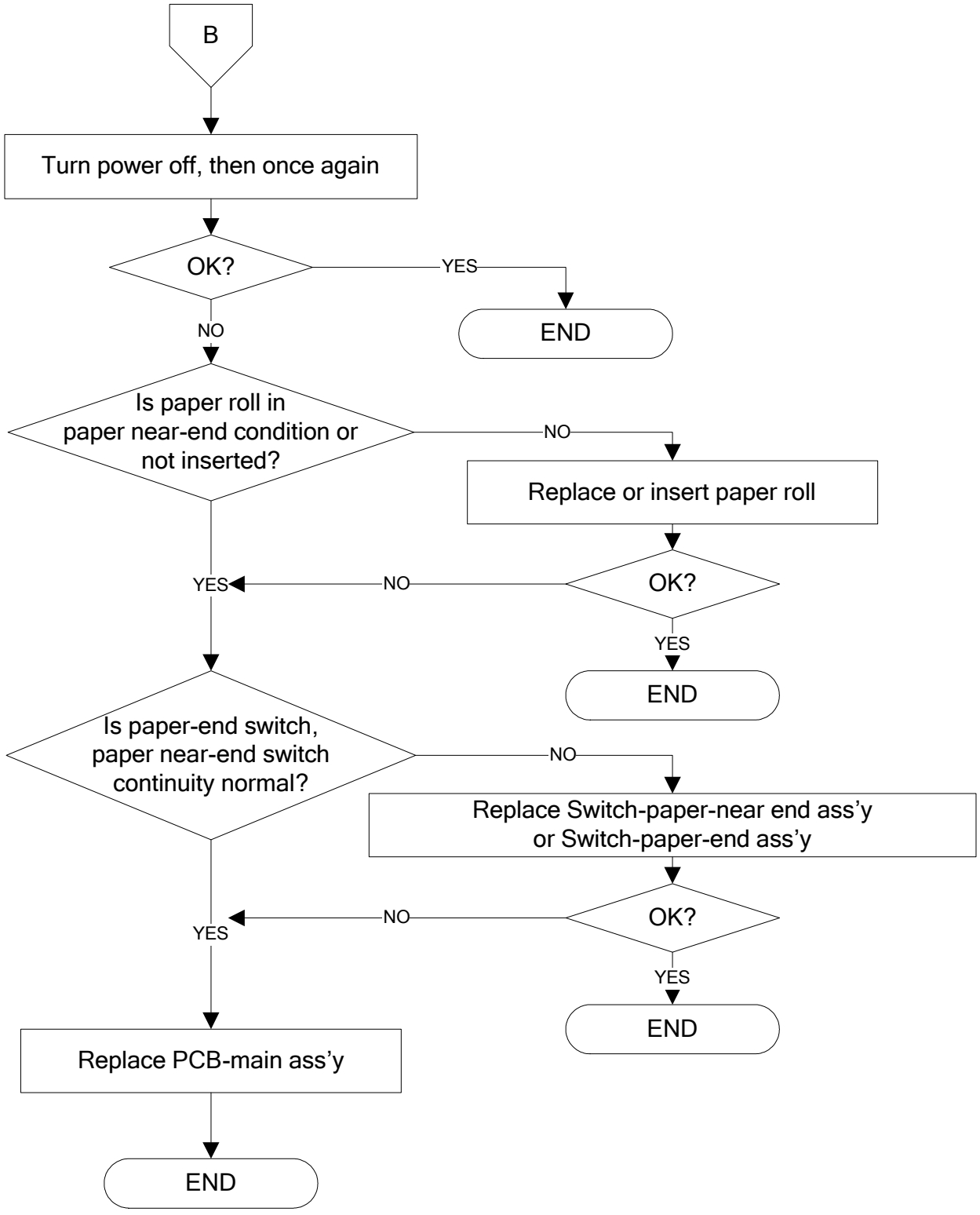

C. ERROR LED is blink

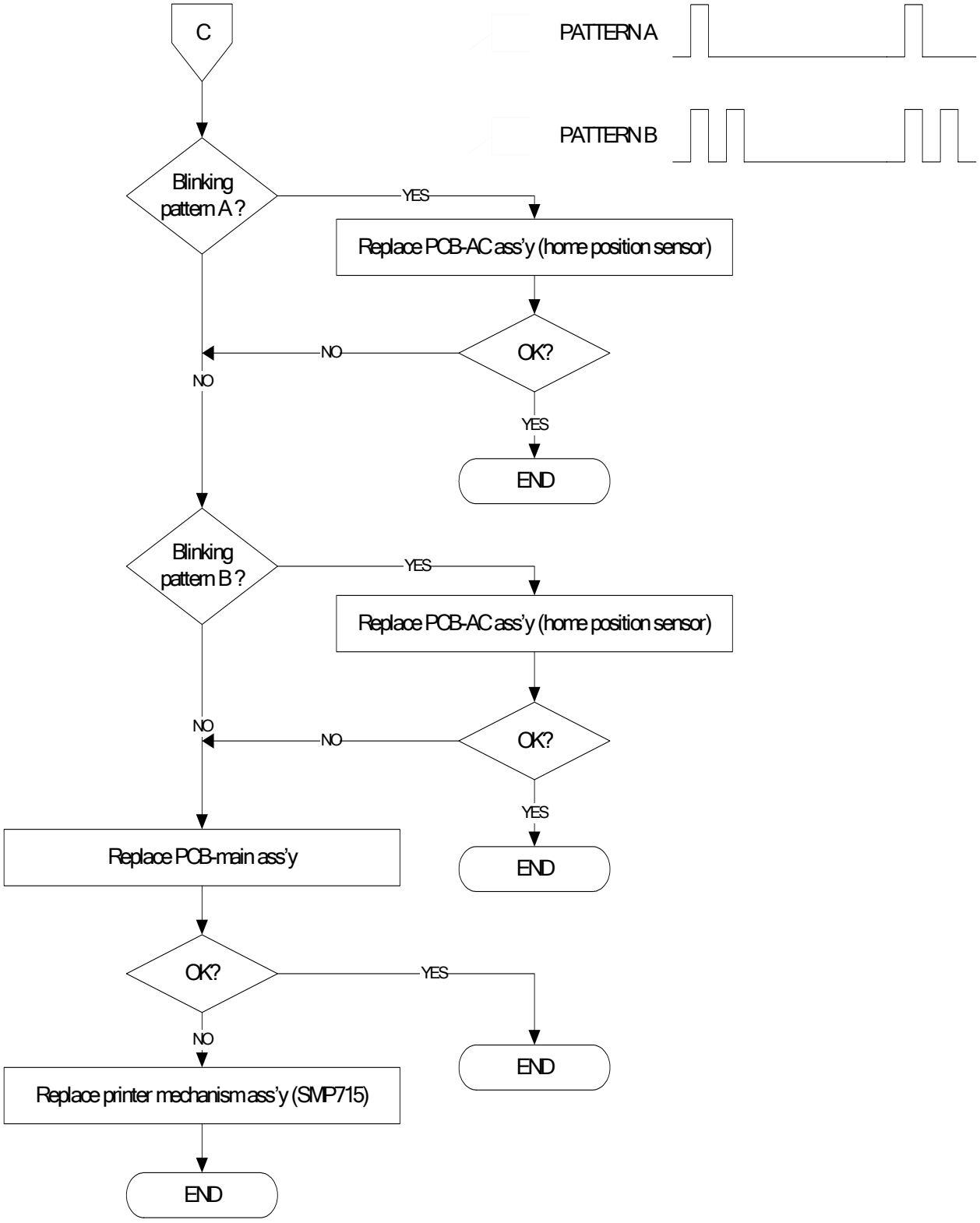

D. ERROR LED is lit

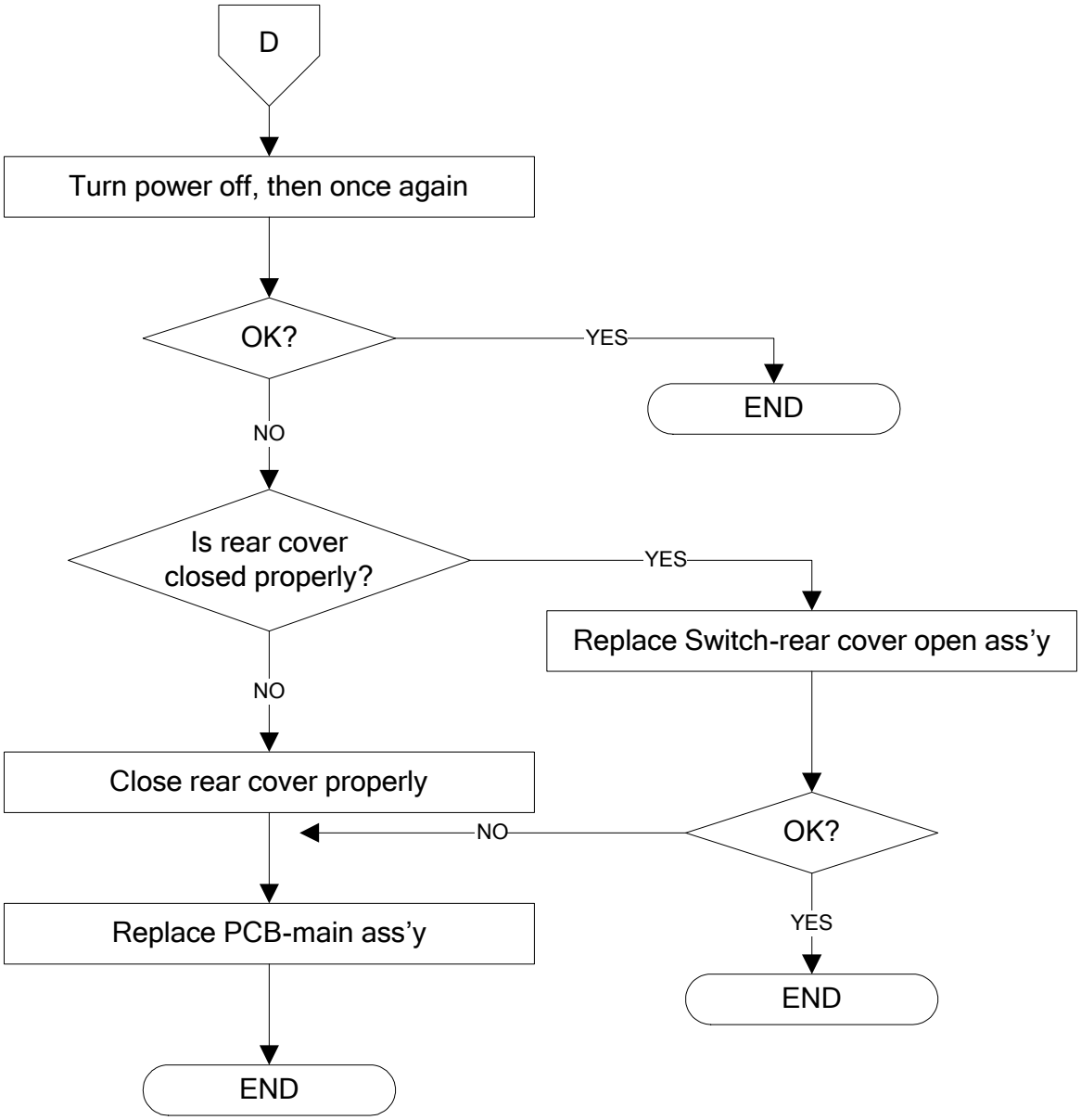

E. Self test is not normal

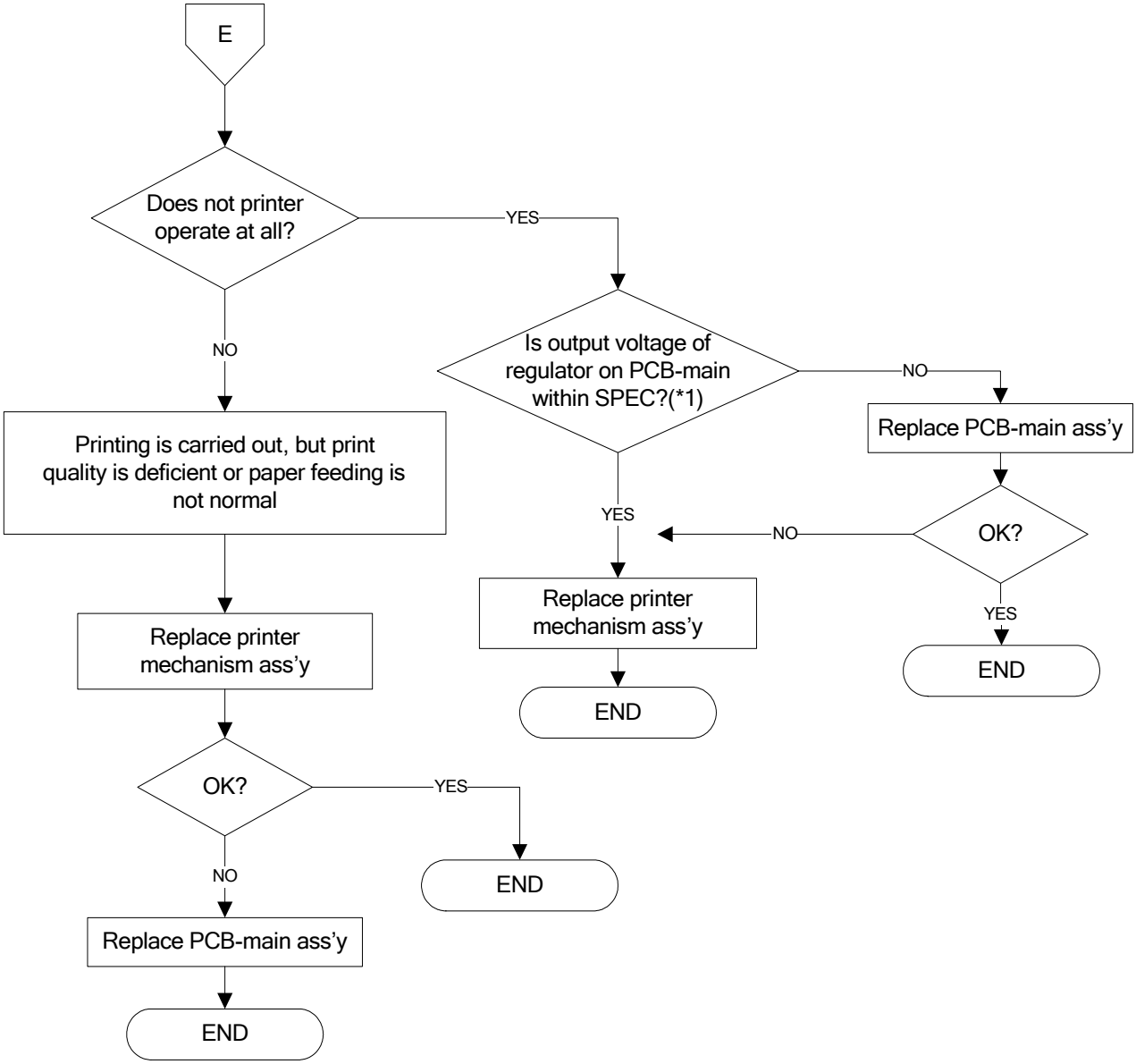

(*1)

Check point	Rating
+terminal of C51	+24V
+terminal of C55	+5V

F. Data from host is not printed normally

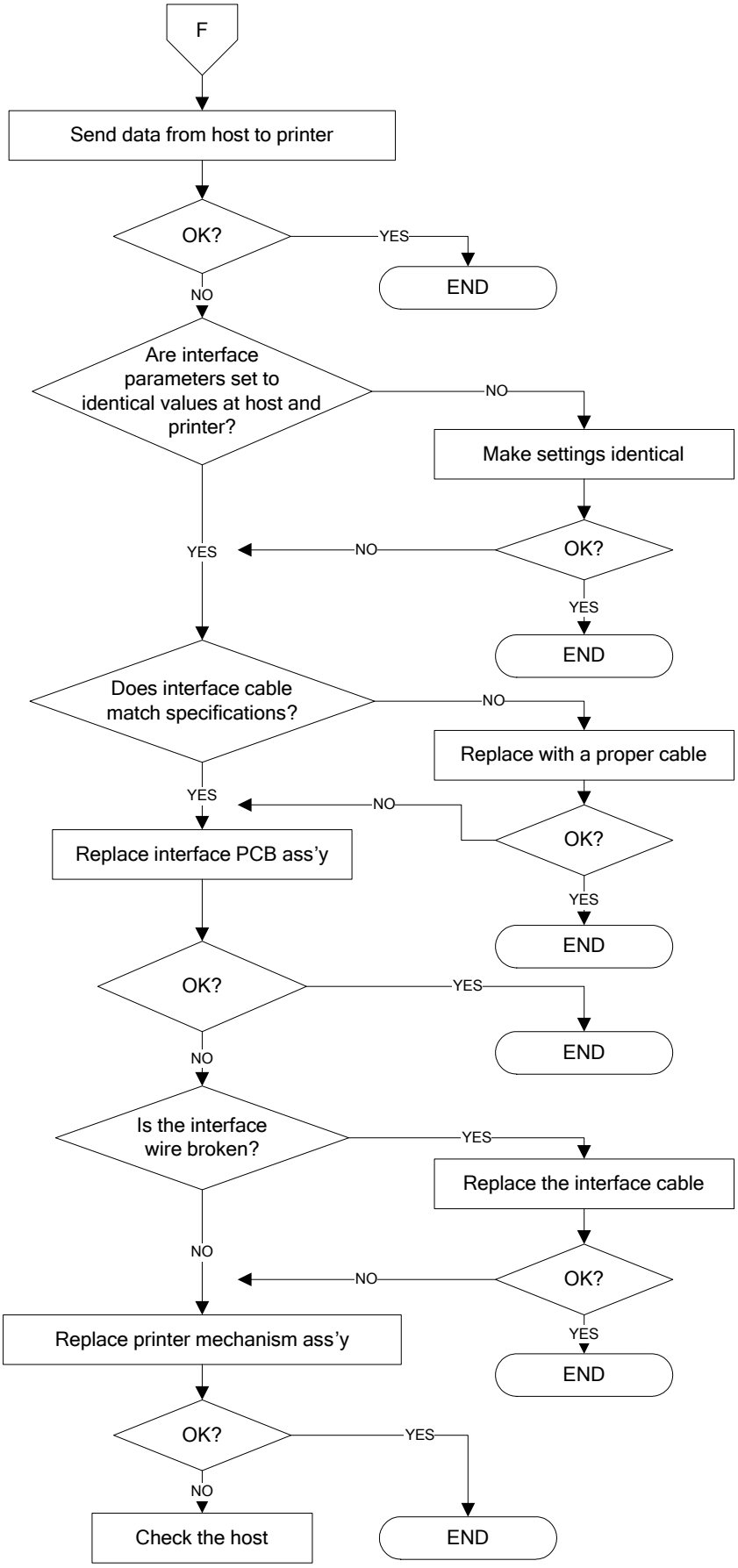

7-2 Troubleshooting flow tables

If a problem that can be verified by visual examination has occurred, use the tables below to determine the cause and perform repairs.

There are four tables, divided by symptom category :

• Initialization Problems

• Printing Quality Problems

• Printer Mechanism Problems

• Auto cutter Mechanism Problems

The tables contains the following columns :

• Problem

This is the symptom that can be verified

• Problem Causes

This is a listing of one or several possible causes that should be examined.

• Level

- Level A

The problem can be corrected by persons who are familiar with the printer and have general knowledge, but special technical skills are not required.

- Level B

The problem requires thorough knowledge and familiarity with the printer as well as technical skills and experience.

• Checkpoint

These are one or more areas in the printer that should be checked.

• Action

These are the steps to correct the problem. If the problem persists after taking these steps, check the other possible causes listed.

7-2-1 Initialization problems

Problem	Probable Cause	Level	Checkpoint	Action
Printer does not operate at all	Output voltage of internal **AC adaptor** or **PCB-main ass'y** failure (Abnormal regulator circuit)	B	Check 24V input voltage at **J11** and output voltage of DC +5V(**C55**)/24V control circuit and fuse(**FU1**)	Replace external Power supply unit or **PCB-main ass'y** or fuse
	PCB-main ass'y failure (Abnormal regulator circuit)	B	Check voltage level at **RESET** terminal (pin 129) of CPU, **U1** (4.75~5.25V)	Replace **PCB-main ass'y**
	PCB-main ass'y failure (Abnormal CPU clock generator circuit)	B	Check clock generator (**U10**)	Replace **PCB-main ass'y**
	PCB-main ass'y failure (Program ROM selection failure)	B	Check input at pin 26 of IC(**U12**)	Replace **PCB-main ass'y**
	PCB-main ass'y failure (RAM selection failure)	B	Check input at pin 14,30,31 of IC(**U15**)	Replace **PCB-main ass'y**
Carriage vibrates, emits an unusual sound, and causes an error state at power on	Excessive belt tension	A	Check **Lever-tension ass'y** If it is assembled properly	Reassemble **Lever-tension ass'y**
	Wire break or bad solder point between connector and HF motor terminals	B	Check continuity between respective terminals	Replace the terminal
			Check solder condition	Resolder as required
	Wire disconnect between HF motor connector and **PCB-head ass'y**	B	Check connected condition	Make sure the connection
	FPC(30pin) is failure or disconnected between **PCB-head ass'y** and **PCB-main ass'y**	B	Check for connected condition of **FPC** and **FPC** failure	Make sure the connection and replace the **FPC**
	Defective HF motor	B	Check if motor operation is proper without load	Replace the HF motor, if is does not rotate properly
	Home position sensor failure	B	Use an oscilloscope to check the sensor output signal when **Carriage head ass'y** passes the sensor	Replace **PCB-head ass'y**
Carriage head ass'y first moves normally, but then hits the left side of the print frame, making an unusual sound	Wear, damage, or contamination of carriage drive gears	A	Check gears for wear and damage	Replace any damaged gears
		A	Check for dirt deposits or other foreign matter	Remove any dirt deposits or foreign matter
	Ribbon cassette's abnormal operation	B	Check for rotated load of ribbon cassette knob	Replace **Ribbon cassette**
	Head is bumped against **Bracket-head-cover-L/R**	B	Check if **Bracket-head-cover-L/R** is slanted to the inside	Make it vertically
HF motor does not operate at all when power is turned on, and causes an error state	**PCB-main ass'y** failure (HF motor drive signal failure)	B	Check input signal to HF motor drive terminal of J3 with an oscilloscope	Replace **PCB-main ass'y**
	Wire break or bad solder point between connector and HF motor terminals	B	Check continuity between respective terminals	Replace the terminal
		B	Check the solder condition	Resolder as required
	Defective power input to HF motor	B	Check the input voltage (24V ±2V) between the motor terminals of the connector using a DVM or oscilloscope	Inspect and repair **AC adaptor** circuit
	FPC(30pin) is failure or disconnected between **PCB-head ass'y** and **PCB-main ass'y**	B	Check the connected condition of **FPC** and **FPC** failure	Make sure the connection and replace **FPC**
	HF motor failure	B	Above six checks have been passed	Replace HF motor
Auto cutter does not operate at all	**FPC**(16pin) is failure or disconnected between **PCB-connector sub ass'y** and **PCB-main ass'y**	B	Check the connected condition of **FPC** and **FPC** failure	Make sure the connection and replace **FPC**
	Incorrect DIP S/W setting	A	Check the DIP Switch 1-3 setting is ON	Correct DIP Switch 1-3 setting
	Auto cutter home position sensor failure	B	Use an oscilloscope to check the sensor output signal when cutter blade passes the sensor	Replace **PCB-AC ass'y**

7-2-2 Printing quality problems

Problem	Probable Cause	Level	Checkpoint	Action
HF motor rotates normally but no dot printing is performed	**FPC-head** connector is disconnected with **PCB-head ass'y** and **Printer-head**	B	Check if the **FPC-head** is properly inserted into its connector of head and its board	If is not, securely reinsert the **FPC-head**
	Broken common lead of **FPC-head**	B	Check the conductivity between the common lead of **FPC-head** and other terminals	Replace the HEAD unit, if there is no conductivity
	FPC(30pin) between the **PCB-head ass'y** and **PCB-main ass'y** is broken	B	Check the conductivity of the **FPC**(30pin)	Replace the **FPC** (30pin) if there is no conductivity
	Positional relationship between **Printer-head** and **Platen**	B	Check if the gap between the platen and the pin of head is correct value : 0.40±0.05mm	Correct the gap
	Ribbon cassette is absent	A	Check **Ribbon cassette**'s existence	Insert **Ribbon cassette**
	Input pulse irregularity	B	Check firing input pulse with an oscilloscope	Replace **PCB-main ass'y**
A certain dot does not print	Damaged lead in **FPC-head**	B	Check the conductivity of lead of **FPC-head**	Replace **FPC-head**
	Positional relationship between the head and the platen	B	Check if the gap between the platen and the pin of head is correct value : 0.40±0.05mm	If incorrect, performed repair with reference
	FPC(30pin) is failure or disconnected between **PCB-head ass'y** and **PCB-main ass'y**	B	Check the connected condition of **FPC** and **FPC** failure	Make sure the connection and replace the **FPC**
	Defective **Printer-head**	B	Check head response to command with oscilloscope	Replace **Printer-head**
Character width changes irregularly	Belt tension is loose	B	Check **Spring-lever-tension** for deformation	Replace or reassemble **Spring-lever-tension**
	Carriage drive area contamination	B	Check gears and pulleys for dirt deposits or other foreign matter	Remove any dirt deposits or foreign matter
	Carriage drive parts wear or damage	B	Check if there are defective parts among gears	Replace defective gear
Print is very faint	**Ribbon cassette** is exhausted	A	Check for ink of ribbon cassette	Replace **Ribbon cassette**
	Head gap is not correct between head and platen	B	Check the gap	If incorrect, performed repair with reference
	Defective **Printer-head**	B	Check head response to command with oscilloscope	Replace **Printer-head**

7-2-3 Printer mechanism problems

Problem	Probable Cause	Level	Checkpoint	Action
Paper roll is not fed or **Paper roll** feed pitch is irregular	Defective paper supply	B	Check the width, length and thickness of the paper	Use paper roll that corresponds to specifications
		A	Check paper roll path for obstacles	Remove any obstacles from paper path
	Occurrence of paper jam	B	Check for paper jam	Open the cover and remove paper jam
	Spring-holder roller is unhooked or damaged	B	Check to see if the spring is unhooked or damaged	Hook **Spring-holder roller** or replace
	In proper connection between PF motor connector and **PCB-head ass'y**	B	Check connected condition of motor connector into **PCB-head ass'y**	Make PF motor connector into **PCB-head ass'y** surely
	Wear or damage of teeth of **Gear feeding** or **Gear reduction**	B	Check the gears for wear or damage	If there is wear or damage, replace the gears
	Wear or damage of rubber of **Shaft-rubber roller**	B	Check the surface of the rubber for wear or damage	If the rubber is worn, replace **Shaft-rubber roller**
	PCB-main ass'y failure (PF motor drive signal failure)	B	Check input signal to paper feed motor drive terminals of **J4** with an oscilloscope	Replace **PCB-main ass'y**
No detection of paper near end, paper end and rear cover open	**Switch-micro** failure or paper dust around switch	A	Check switch function or dust around switch	Replace **Switch ass'y** or remove dust
Ribbon feed mechanism does not feed	The ratchet of **Ribbon cassette** is damaged or worn out	B	Check whether the ratchet of **Ribbon cassette** is damaged or worn out	Replace it if damaged or worn out
	Wear or damage of the teeth of the gears	B	Check **Ribbon feeder ass'y** and **Gear-RE_A**, **B**, **C** for wear of damage	If there is wear or damage, replace it
No working on ribbon shifting	**Lever-change color** does not come back to normal position	B	Check if **Lever-change color** position while solenoid on and off	Replace **Solenoid**
	Carriage head ass'y does not function to shift **Ribbon cassette**	B	Check if head carriage operation when it pushes the **Frame-ribbon**	Remove dust around the gear train, **Shaft-head_guide** and **Shaft-head carriage**
Rear cover does not closed	**Spring-locking-L/R** is absent or not hooked	B	Check if **Spring-locking-L/R**'s existence and its position	Reassemble it
Different character than input code is printed	Communication condition such as transmission speed not set correctly	A	Check DIP Switch settings	Set DIP Switches correctly (See Section 2.2.2 Setting the DIP Switches)
	Communication cable failure	A	Check to see if the cable RS-232C null modem cable, and check its continuity	Replace cable
	Command problem	B	Check data sent from host with hexadecimal dumping function	Correct the application program
	Interface failure (Receive/driver IC failure)	B	Above three checks have been passed	Replace interface

7-2-4 Auto cut mechanism problems

Problem	Probable Cause	Level	Checkpoint	Action
Paper does not cut despite normal operation of **Motor-DC**	No intersection between **Cutter** and **Cutter lower**	B	Check for intersection	Reassemble **Auto cutter ass'y** or **Cutter lower ass'y**
Motor-DC does not rotate	Defective soldering between **Motor-DC** and connector wire	B	Check soldering condition	Resolder as required
	Defective connection between connector of **Auto cutter ass'y** and **PCB-AC ass'y**	B	Check for connection of connector	Make sure connection of connector

8. Appendix (Mechanism operating principles)

The printer mechanism of the SRP-275 consists of the following component mechanisms:

- Transport mechanism
- Printing mechanism
- Detection mechanism
- Auto cutter mechanism
- Easy paper loading mechanism

These components are described in detail in the following sections.

8-1 Transport mechanism

8-1-1 Head feeding system

This printer is using DC24V PM Type Stepping motor. As shown in figure, the motor section consists of the motor, motor speed control IC, motor drive/brake circuit and motor speed interface.

When the HF(Head Feed) motor is driven and the HF motor pinion is moved in the direction of arrow B, the rotational power is conveyed to the belt drive pulley, then the belt. Next the **Carriage head ass'y**, which is fixed to the belt, moved in the direction of arrow B.

When the HF motor pinion is rotated in the direction of arrow A, the **Carriage head ass'y** is moved in the direction of arrow A.

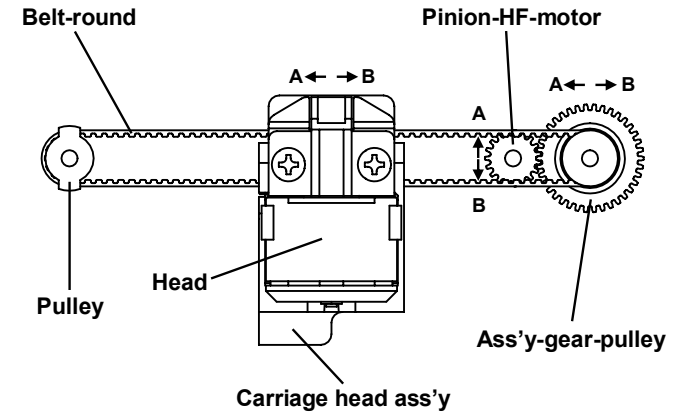

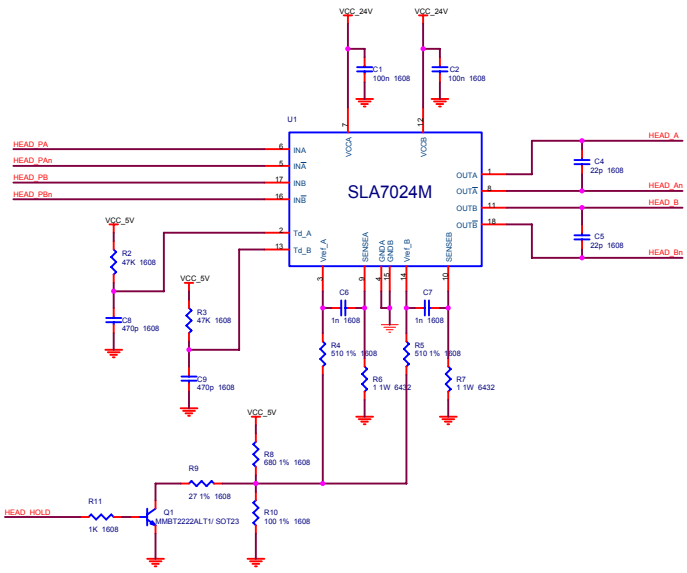

8-1-2 Paper feeding system

Paper feeding is performed by conveying the PF(Paper Feed) motor's rotational power from the PF motor pinion through the **Gear reduction** and **Gear feeding**.

Since the **Shaft-rubber roller** and **Roller holder** are pressed together, paper advances to the top of the **Rotator ass'y** because of the friction between the rubber of the **Shaft-rubber roller** and the **Roller holder**.

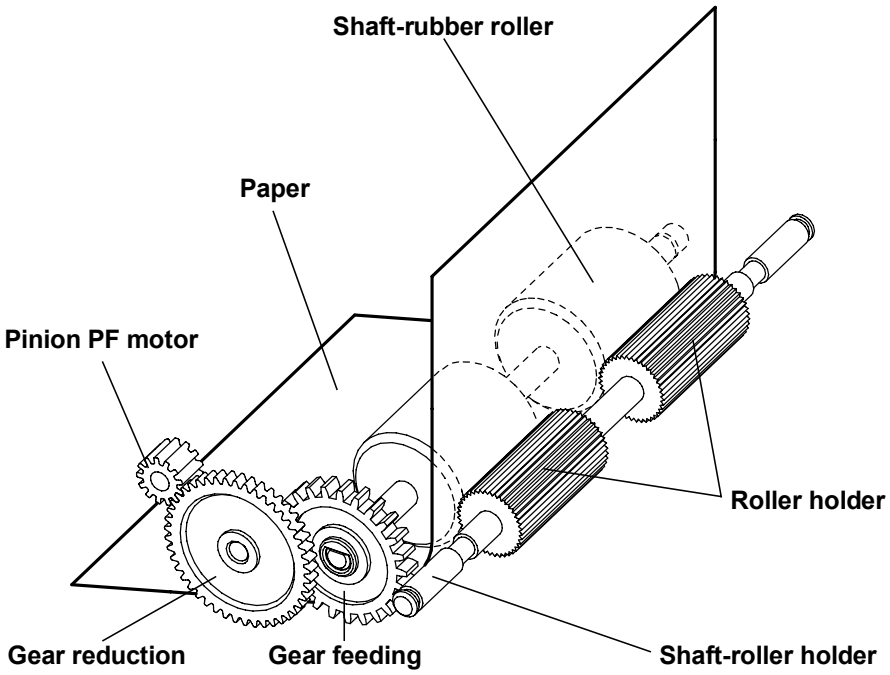

As shown in figure, paper feeding system consists of **Shaft-rubber roller**, **Roller holder**, **Motor-step**, **Gear reduction** and **Gear feeding**. The paper feeding operation can be selected by controlling the **Motor-step**. Paper feeding is made as follows; As **Motor-step** set turning by electric signal, **Shaft-rubber roller** comes into turning, passing **Gear reduction**. For **Shaft-roller holder** is pressed to **Roller holder** by **Spring-roller holder**, paper is feed by friction. Pitch is 1/144″.

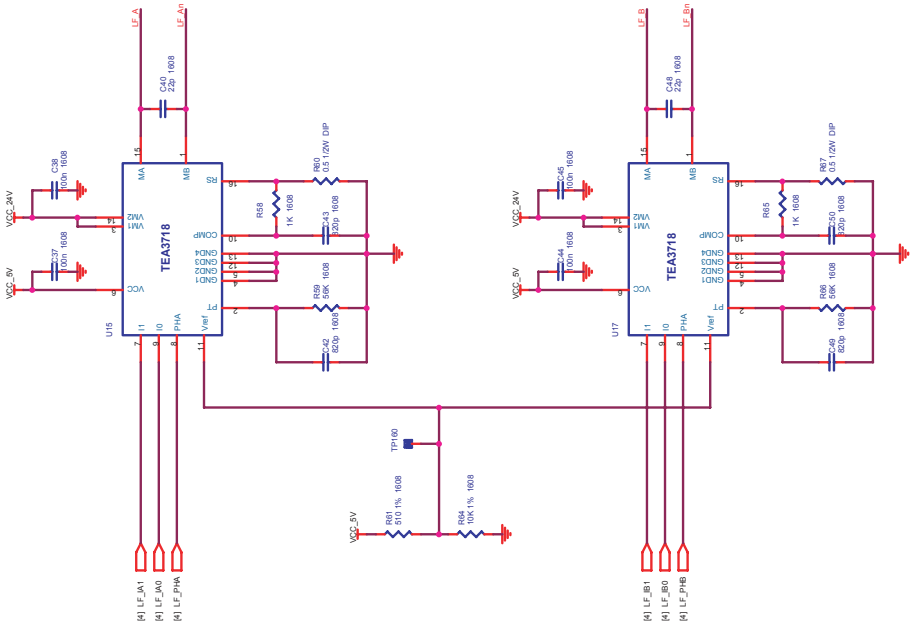

8-1-3 Ribbon feeding system

When the HF motor rotates CCW(CounterClockWise) and the HF motor pinion rotates in the direction of arrow A, **Gear-RE(REduction)_B**, **Gear-RE_A** and **Gear-RE_B'** rotate in the directions of arrows B, and C, D respectively. This causes the **Lever ribbon feeder ass'y** to move in the direction of arrow E, rotating round the **Shaft-reduction A/C** in the center, until the **Gear-RE_B'** goes in with the **Gear-RE_C**.

Since the **Gear-RE_C** and the **Ribbon feeder ass'y** are always engaged, the **Ribbon feeder ass'y** rotates in the direction of arrow G.
When the HF motor rotates in the reverse direction and the HF motor pinion rotates in the direction of arrow a, the **Lever ribbon feeder ass'y** moves in the direction of arrow e, disengaging the **Gear-RE_B'** from the **Gear-RE_C**.

Therefore, the **Ribbon feeder ass'y** rotates in the direction of arrow G only when the HF motor rotates CCW. Then the **Ribbon feeder** and ribbon hold rollers in the **Ribbon cassette**, which are engaged with the **Ribbon feeder ass'y**, rotate and the ribbon is fed.

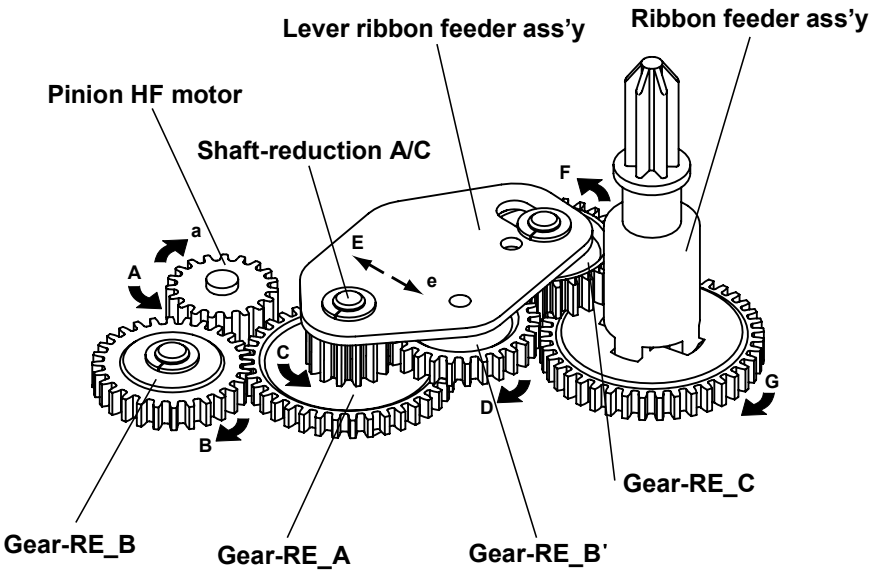

8-1-4 Color changing system

Color change system consists of Ribbon feeding system in section 8-1-3 and Ribbon shifting system in section 8-1-4-1

8-1-4-1 Ribbon shifting system

Shifting system of Ribbon consisted of **Carriage head ass'y**, **Frame-ribbon**, **Lever-change color**, **Solenoid and Spring-solenoid** as show in figure.

Ribbon shifting action is as follows.
When you'd like to change from black color to red color, you should move the **Carriage head ass'y**. As the HF motor rotates CW(ClockWise), **Carriage head ass'y** moves from left to right. As **Carriage head ass'y** moves to right, it dashes against **Frame-ribbon**(A), and **Frame-ribbon** is in shift up(B), and **Lever-change color** is turn by Spring-solenoid(C). And then printing color is printed by red.
At this moment, if you'd like to change from red color to black color, you should control **Solenoid**. If not energized in **Solenoid**, plunger are not moved, and so **Lever-change color** does not turn, and Frame-ribbon is not in shift down. As **Solenoid** moves energized, and plunger pulls and **Lever-change color** turns(D), and Frame-ribbon is in shift down(E). And then printing color is printed by black.

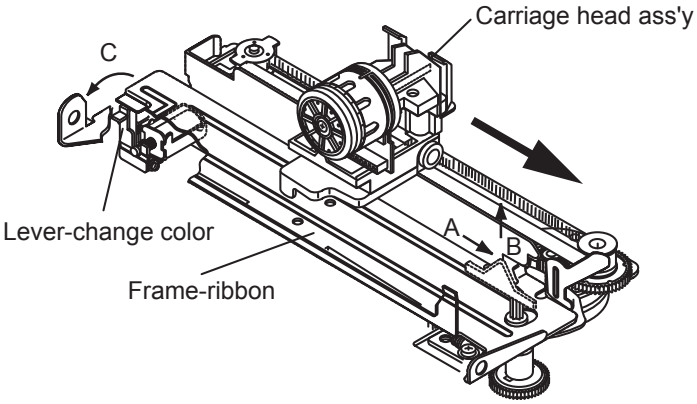

MOVING RIBBON UPWARD
HEAD CARRIAGE SHIFT(BLACK-->RED)

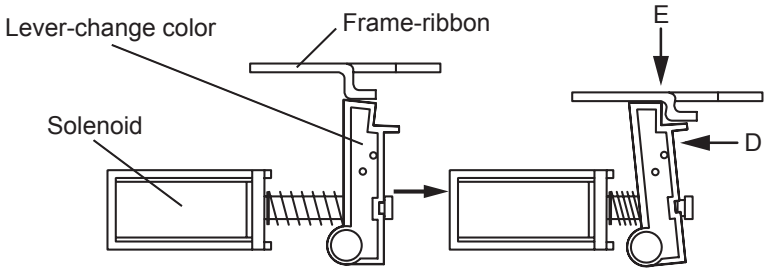

MOVING RIBBON DOWNWARD
SOLENOID ON(RED-->BLACK)

8-2 Printing mechanism

When the specified print head drive pulse is input to the drive coil, the iron core is magnetized, and the actuating plate is pulled in the direction of arrow A. This action pushed the wire toward the **Platen**. When the wire strikes the ink ribbon and paper against the **Platen**(*1), a single dot is printed.
When the energizing of the drive coil is completed, the wire and actuating plate are returned to the standby position by the wire return spring and actuating plate spring.

NOTES

(*1) The "**Platen**" is the portion of the base paper feed being struck by the wires during printing.

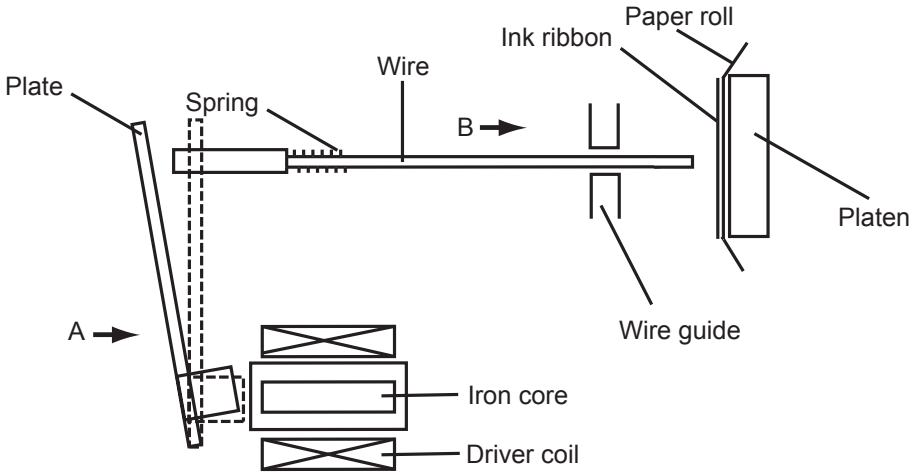

8-3 Detection mechanism

Each of the detection component mechanism in the SRP-275 and their corresponding function are listed below. Detailed explanations of each of the detection mechanism are provided in this section.

Detection mechanism	Function
Home position	Initial setting of SRP-275
Paper near end	Detection of presence/a little presence of paper roll
Paper end	Detection of presence/absence of paper roll
Rear cover open	Detection of the rear cover open/close
Auto cutter home position	Initial setting of Auto cutter

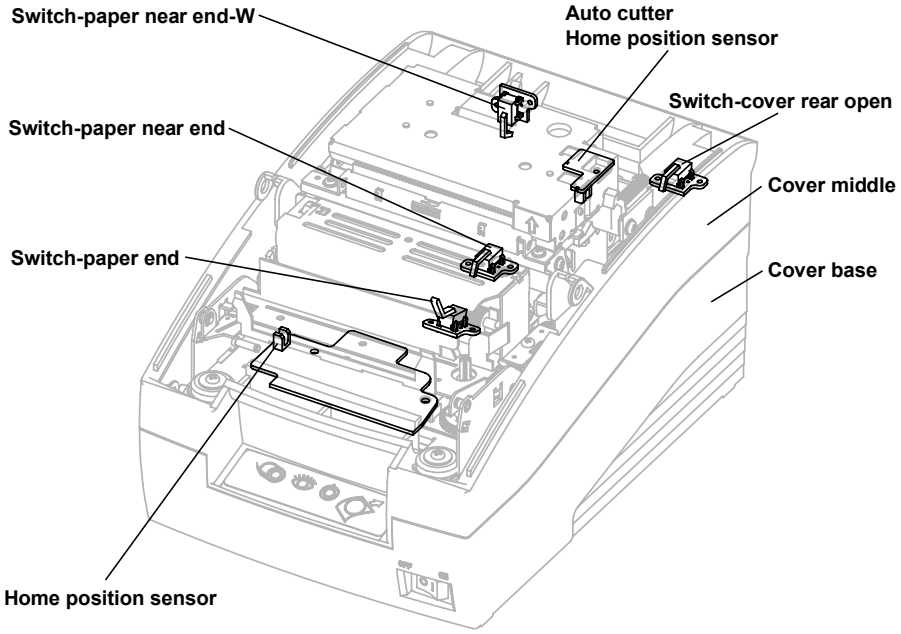

8-3-1 Home position detection mechanism

The home position detection mechanism consists of the detection plate at the left side of the **Carriage head ass'y** and the home position sensor at the left side of the **Frame-main**. It determines the home position, identifies the head carriage position, and detects **Carriage head ass'y** operation errors.

The home position sensor consists of an LED and photo transistor. When the **Carriage head ass'y** moves, the detection plate passes between the LED and photo transistor and blocks the optical axis of the photo transistor, changing the output level of the photo transistor.

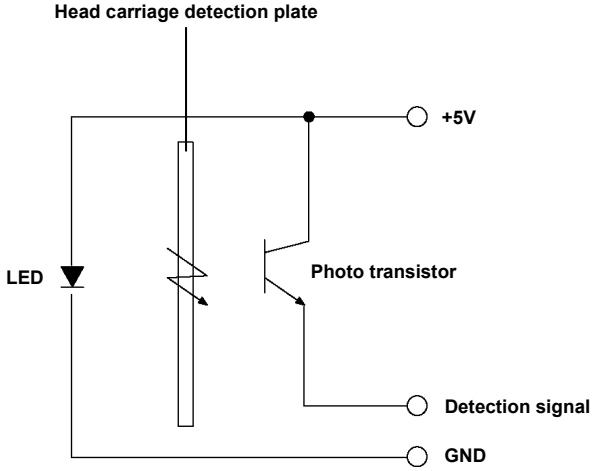

8-3-2 Paper near end detection mechanism

Paper near end detection mechanism consists of **Switch-paper near end** and **Switch-paper near end-W** (using the wall mount). These switches detect the amount of paper left on the paper roll through OR logical operation.

The **Switch-paper near end** consists of the paper near end detection lever and micro switch, and is located on the left of the **Cover base**. The **Switch-paper near end-W** consists of the near end detection lever and micro switch, and is located on the left of the **Cover middle**. These switches detect the amount of paper left on the paper roll.
The tip of the paper near end detection lever is always pressed against the paper roll by a spring inside the micro switch. Therefore, when there is a large amount of paper remaining on the roll, the paper near end detection lever is pressed against the paper roll as figure.
This keeps the micro switch turned on. When the almost out of paper on the roll the tip of the paper near end detection lever is no longer pressed against the paper roll and moves in the direction indicated by the arrow A. This turns the micro switch off and generates a signal indicating that the paper roll is near its end.

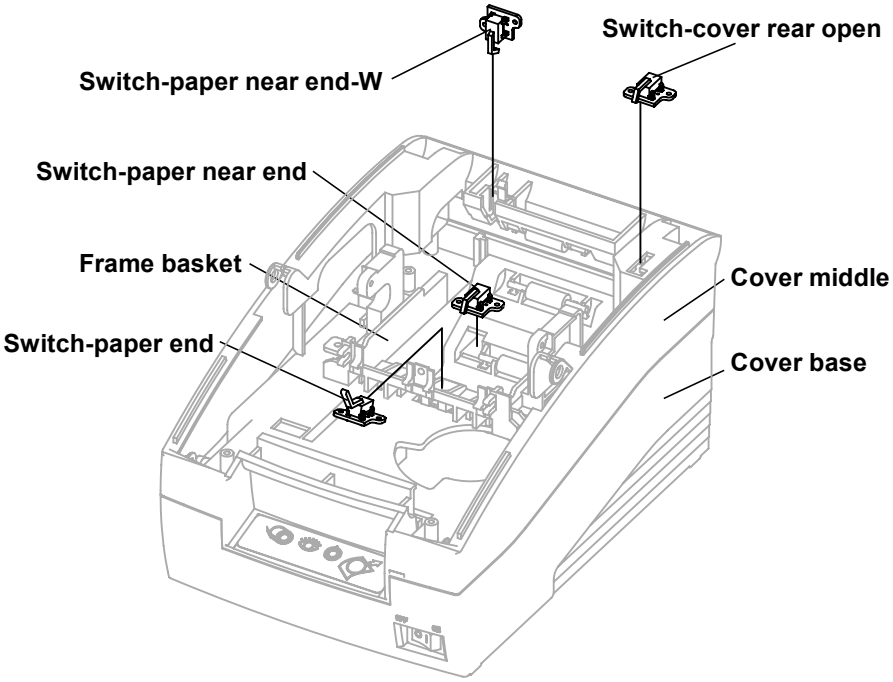

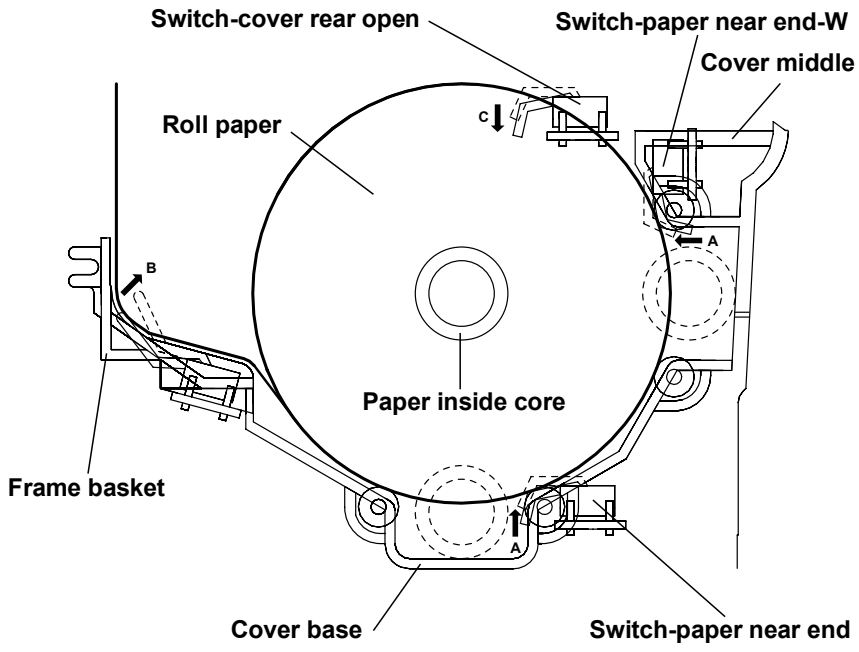

8-3-3 Paper end detection mechanism

The Switch-paper end consists of the paper end detection lever and micro switch, and is located on the center of the **Frame basket**. This switch detects the presence/absence state of the paper roll.

The tip of the paper end detection lever is always pressed against the paper roll by a spring inside the micro switch. Therefore, when there is a paper remaining on the roll, the paper end detection lever is pressed against the paper roll as figure.
This keeps the micro switch turned on. When the almost out of paper on the roll the tip of the paper end detection lever no longer presses against the paper roll and moves in the direction indicated by the arrow B.
This turns the micro switch off and generates a signal indicating that the paper roll is end.

8-3-4 Rear cover open detection mechanism

The **Switch-cover rear open** detects the **Cover rear** open/close state, the **Switch-cover rear open** is located on the right of **Cover middle**.

This keeps the micro switch turned on. When the almost out of **Cover rear** the tip of the rear cover detection lever no longer presses against the **Cover rear** and moves in the direction indicated by the arrow C.
This turns the micro switch off and generates a signal indicating that the **Cover rear** is open.

8-3-5 Auto cutter home position detection mechanism

The Auto cutter home position detection mechanism is located at the right end of the circular cutter subset stroke. This mechanism confirms the position of the circular cutter and detects any abnormalities in its operation. Initial setting is performed by sensing the detection plate on the rear of the **AC upper cutter ass'y**.

The Auto cutter home position sensor consists of an LED and a photo IC. When the circular cutter moves, the detection plate moves between the LED and the photo IC.
The beam of light is then interrupted, and the output level of the photo IC changes. This change in the output level is read and used as the circular cutter position detection signal.

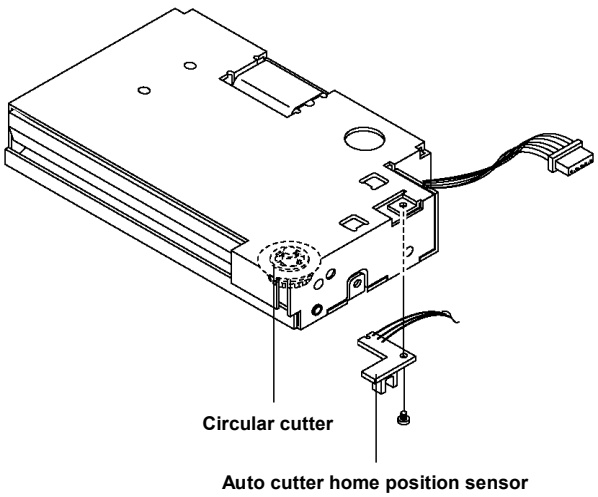

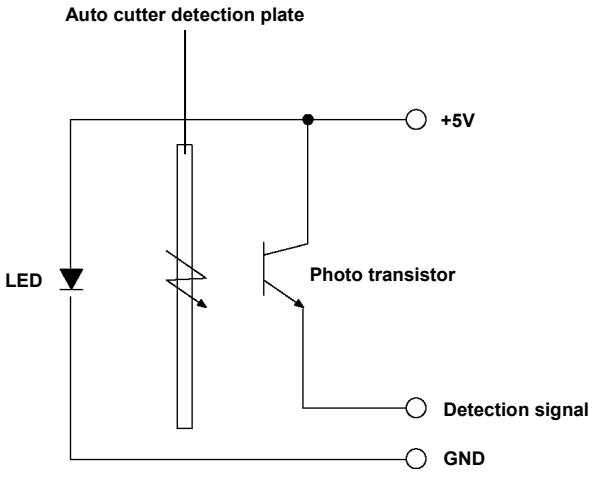

8-4 Auto cutter mechanism

When the Auto cutter motor set drives the worm gear so that it rotates in the direction of arrow A, the rotational force is transferred to the **Gear-AC worm wheel** and **Gear-AC gear pulley** (Belt drive pulley). Each gear rotates in the direction of arrow. In accordance with rotation of the **Gear-AC gear pulley** (Belt drive pulley), belt moves in direction of arrow B. The **AC upper cutter guide ass'y** is connected on the belt so that it moves in direction of arrow C. When the circular cutter moves on the lower cutter, the paper is cut.

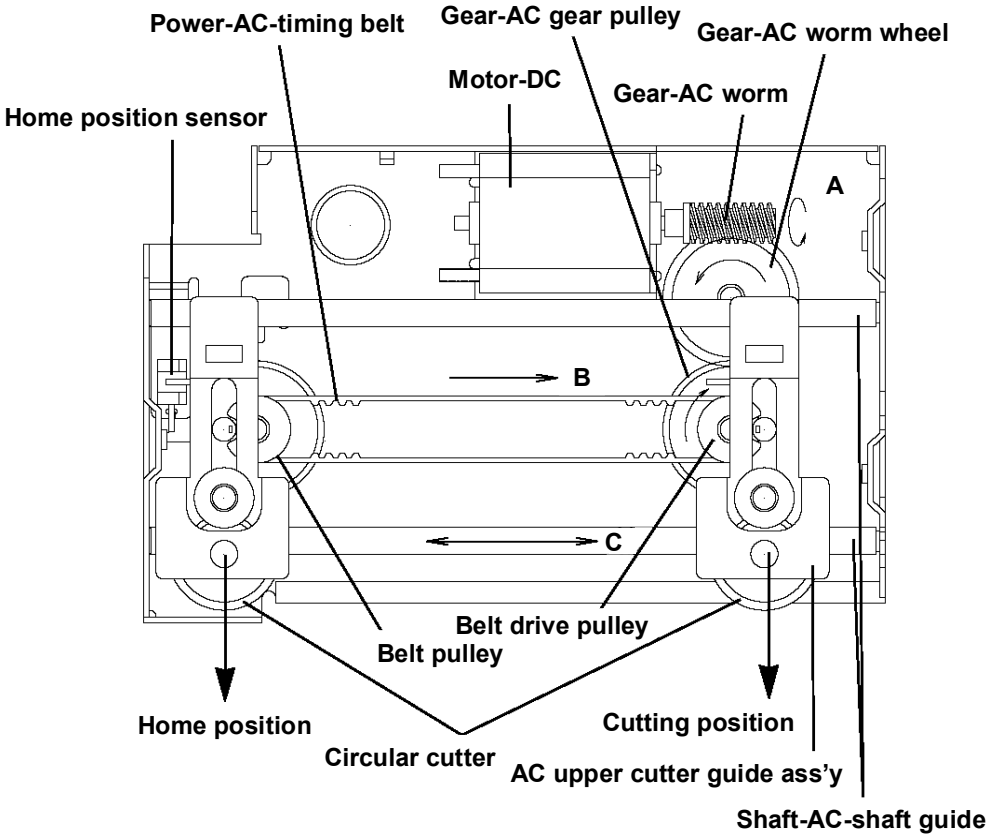

8-5 Easy paper loading mechanism
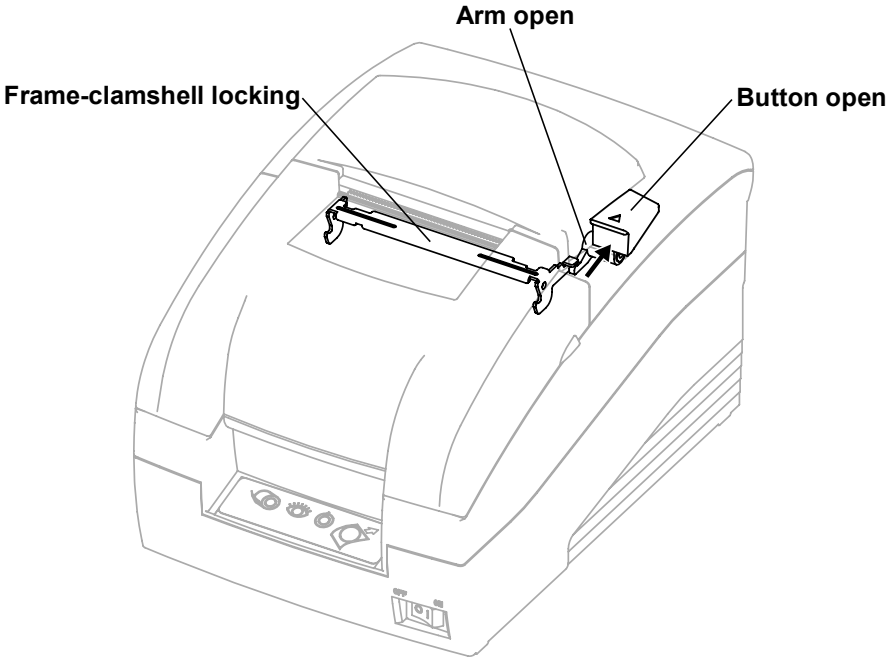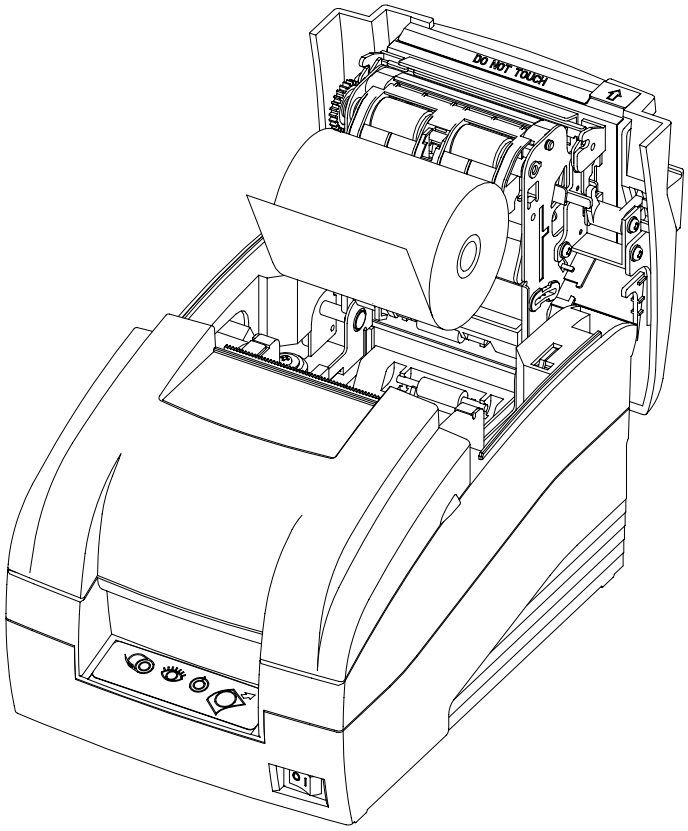
SRP-275 has easy paper loading mechanism which enables a paper loading and a paper jam to be solved easily. When a paper jam happens or a paper is out, push **Button open** then the force will be transferred to **Arm open**. The protrusion portion of **Arm open** will push up the **Frame-clamshell locking** of **Rotator ass'y.** After removing a paper jam or replacing a paper roll, close the Cover rear.